New Product

OMRON

Switch Mode Power Supply
S8VK-S (30/60/120/240/480-W Models)

A Perfect Fit for Small Control Panels
Coated PCBs for Better Resistance to Environment
Connections for Easy Wiring

- Operation possible at ambient temperatures from -40 to 70°C.
- Side-by-side mounting possible (up to 55°C). ✻1
- DC input supported (90 to 350 VDC).
- Power Boost function at 120% (30/60 and 120 W); Power Boost function at 150% (240 and 480 W).
- Low-voltage detection output (only for 240 and 480 W).
- ANSI/ISA 12.12.01.
- Certification for 3,000 m altitude (UL/EN/IEC 60950-1 and EN 50178).
- Complies with EN/IEC 61558-2-16.
- Lloyd's, DNV GL (Except 30 W)
- Five years Warranty ✻2

✻1. For front, side-by-side mounting, see page 18.
✻2. Refer to *Period and Terms of Warranty* on page 23 for details.

⚠ Refer to Safety Precautions for All Power Supplies and Safety Precautions on page 17.

Recommended Noise Filter

Noise filter
S8V-NF

Listed on page 25.

Model Number Structure

Model Number Legend

Note: Not all combinations are possible. Refer to *List of Models* in *Ordering Information*, below.

S8VK- S□□□□□
1 2

1. Power Ratings
030: 30 W
060: 60 W
120: 120 W
240: 240 W
480: 480 W

2. Output voltage
24: 24 V

Ordering Information

Note: For details on normal stock models, contact your nearest OMRON representative.

Power ratings	Rated input voltage	Rated output voltage	Rated output current	Maximum boost current	Model number
30 W	100 to 240 VAC (allowable range: 85 to 264 VAC or 90 to 350 VDC)	24 V	1.3 A	1.56 A	**S8VK-S03024**
60 W		24 V	2.5 A	3 A	**S8VK-S06024**
120 W		24 V	5 A	6 A	**S8VK-S12024**
240 W		24 V	10 A	15 A	**S8VK-S24024**
480 W		24 V	20 A	30 A	**S8VK-S48024**

Specifications

Ratings, Characteristics, and Functions

Item			Power rating / Output voltage	30 W / 24 V	60 W / 24 V	120 W / 24 V
Efficiency		115 VAC input ✻1		87% typ.	87% typ.	90% typ.
		230 VAC input ✻1		86% typ.	89% typ.	92% typ.
Input	Voltage range ✻2			Single-phase, 85 to 264 VAC, 90 to 350 VDC ✻12, 265 to 300 VAC (1 second)		
	Frequency ✻2			50/60 Hz (47 to 450 Hz)		50/60 Hz (47 to 63 Hz)
	Input current	115 VAC input ✻1		0.58A typ.	1.1 A typ.	1.2 A typ.
		230 VAC input ✻1		0.36A typ.	0.66 A typ.	0.63 A typ.
	Power factor			---		0.9 min.
	Leakage current ✻3	115 VAC input		0.5 mA max.		
		230 VAC input		1 mA max.		
	Inrush current ✻4 (for a cold start at 25°C)	115 VAC input		16 A typ.		
		230 VAC input		32 A typ.		
Output	Rated output current			1.3 A	2.5 A	5 A
	Rated output electric power			31.2 W	60 W	120 W
	Maximum boost current			1.56 A	3 A	6 A
	Voltage adjustment range ✻5			21.6 to 28 V (with V.ADJ)		
	Ripple & Noise voltage ✻6	100 to 240 VAC input ✻1		190 mVp-p max. at 20 MHz of bandwidth	190 mVp-p max. at 20 MHz of bandwidth	110 mVp-p max. at 20 MHz of bandwidth
	Input variation influence ✻7			0.5% max.		
	Load variation influence ✻8			1.5% max.		
	Temperature variation influence	115 to 230 VAC input		0.05%/°C max.		
	Start up time ✻4	115 VAC input ✻1		1000 ms max.	1000 ms max.	1000 ms max.
		230 VAC input ✻1		1000 ms max.	1000 ms max.	1000 ms max.
	Hold time ✻6	115 VAC input ✻1		30 ms typ.	20 ms typ.	45 ms typ.
		230 VAC input ✻1		140 ms typ.	95 ms typ.	45 ms typ.
Additional functions	Overload protection			Yes, automatic reset		
	Overvoltage protection ✻9			Yes, 130% or higher of rated output voltage, power shut off (shut off the input voltage and turn on the input again)		
	Series operation			Yes (For up to two Power Supplies, external diodes are required.)		
	Parallel operation			Yes (For up to two Power Supplies), Refer to *Parallel Operation* on page 21 for details.		
	Output indicator			Yes (LED: Green)		
	Low-voltage detection output			No		
Insulation	Withstand voltage			3.0 kVAC for 1 min. (between all input terminals and output terminals), current cutoff 10 mA		
				2.0 kVAC for 1 min. (between all input terminals and PE terminals), current cutoff 10 mA		
				1.0 kVAC for 1 min. (between all output terminals and PE terminals), current cutoff 20 mA		
	Insulation resistance			100 MΩ min. (between all output terminals and all input terminals/PE terminals) at 500 VDC		
Environment	Ambient operating temperature ✻10			−40 to 70°C (Derating is required according to the temperature. Refer to *Engineering Data*) (with no condensation or icing)		
	Storage temperature			−40 to 85°C (with no condensation or icing)		
	Ambient operating humidity			95% RH max. (Storage humidity: 95% RH max.)		
	Vibration resistance			10 to 55 Hz, maximum 5G, 0.42 mm half amplitude for 2 h each in X, Y, and Z directions		
	Shock resistance			150 m/s², 3 times each in ±X, ±Y, ±Z directions		
Reliability	MTBF			135,000 hrs min. (Refer to page 12 *Reference Value*)		
	Life expectancy ✻11			10 years min.		
Construction	Weight			250 g max.	250 g max.	400 g max.
	Cooling fan			No		
	Degree of protection			IP20 by EN/IEC 60529		
Standards	Harmonic current emissions			Conforms to EN 61000-3-2		
	EMI	Conducted Emissions		Conforms to EN 61204-3 Class B, EN 55011 Class B		
		Radiated Emissions		Conforms to EN 61204-3 Class B, EN 55011 Class B		
	EMS			Conforms to EN 61204-3 high severity levels		
	Approved Standards			UL Listing: UL 508,ANSI/ISA 12.12.01 (For 30 W and 60 W only Class2 Output: Per UL 1310) cUL: CSA C22.2 No107.1, CSA C22.2 No213 (For 30 W and 60 W only Class2 Output: Per CSA C22.2 No.223) UL UR: UL 60950-1 (Recognition) OVCII (≤ 3000 m) Pol2 cUR: CSA C22.2 No. 60950-1 OVCII (≤ 3000 m) Pol2 EN: EN 50178 OVCIII (≤ 2000 m) OVCII (2000 m≤ and≤3000) Pol2, EN 60950-1 OVCII (≤ 3000 m) Pol2 ATEX: EN 60079-0, EN 60079-15 Cert. DEMKO 16 ATEX 1708X (Except 30 W) Ex II 3G Ex nA IIC T3 Gc IECEx: IEC 60079-0, IEC60079-15 Cert. IECEx UL 16.0082X (Except 30 W) Ex nA IIC T3 Gc		
	Conformed Standards			PELV (EN/IEC 60204-1) ✻12		
				EN/IEC 61558-2-16:2009+A1:2013 ✻12		
	Marine Standards ✻12			Lloyd's register (Except 30 W) DNV GL (Except 30 W)		
	SEMI			Conforms to F47-0706 (200 to 240 VAC input)		

Note: For notes ✻1 to ✻12, refer to page 4.

Item		Power rating / Output voltage	240 W / 24 V	480 W / 24 V
Efficiency		115 VAC input ✻1	91% typ.	91% typ.
		230 VAC input ✻1	93% typ.	93% typ.
Input	Voltage range ✻2		Single-phase, 85 to 264 VAC, 90 to 350 VDC ✻12, 265 to 300 VAC (1 second)	
	Frequency ✻2		50/60 Hz (47 to 63 Hz)	
	Input current	115 VAC input ✻1	2.4 A typ.	4.6 A typ.
		230 VAC input ✻1	1.3 A typ.	2.3 A typ.
	Power factor		0.9 min.	0.9 min.
	Leakage current ✻3	115 VAC input	0.5 mA max.	
		230 VAC input	1 mA max.	
	Inrush current ✻4 (for a cold start at 25°C)	115 VAC input	16 A typ.	
		230 VAC input	32 A typ.	
Output	Rated output current		10 A	20 A
	Rated output electric power		240 W	480 W
	Maximum boost current		15 A	30 A
	Voltage adjustment range ✻5		21.6 to 28 V (with V.ADJ)	
	Ripple & Noise voltage ✻6	100 to 240 VAC input ✻1	100 mVp-p max. at 20 MHz of bandwidth	130 mVp-p max. at 20 MHz of bandwidth
	Input variation influence ✻7		0.5% max.	
	Load variation influence ✻8		1.5% max.	
	Temperature variation influence	115 to 230 VAC input	0.05%/°C max.	
	Start up time ✻4	115 VAC input ✻1	1000 ms max.	1000 ms max.
		230 VAC input ✻1	1000 ms max.	1000 ms max.
	Hold time ✻6	115 VAC input ✻1	35 ms typ.	30 ms typ.
		230 VAC input ✻1	35 ms typ.	30 ms typ.
Additional functions	Overload protection		Yes, automatic reset	
	Overvoltage protection ✻9		Yes, 130% or higher of rated output voltage, power shut off (shut off the input voltage and turn on the input again)	
	Series operation		Yes (For up to two Power Supplies, external diodes are required.)	
	Parallel operation		Yes (For up to two Power Supplies), Refer to *Parallel Operation* on page 21 for details.	
	Output indicator		Yes (LED: Green)	
	Low-voltage detection output		Yes (Photoswitch output: 30 VDC max., 50 mA max.)	
Insulation	Withstand voltage		3.0 kVAC for 1 min. (between all input terminals and output terminals), current cutoff 20 mA	
			2.0 kVAC for 1 min. (between all input terminals and PE terminals), current cutoff 20 mA	
			1.0 kVAC for 1 min. (between all output terminals and PE terminals), current cutoff 20 mA	
			500 VAC for 1 min (between all output terminals and all low-voltage detection output terminals), current cutoff 10 mA	
	Insulation resistance		100 MΩ min. (between all output terminals/all low-voltage detection output terminals and all input terminals/PE terminals) at 500 VDC	
Environment	Ambient operating temperature ✻10		−40 to 70°C (Derating is required according to the temperature. Refer to *Engineering Data*) (with no condensation or icing)	
	Storage temperature		−40 to 85°C (with no condensation or icing)	
	Ambient operating humidity		95% RH max. (Storage humidity: 95% RH max.)	
	Vibration resistance		10 to 55 Hz, maximum 5G, 0.42 mm half amplitude for 2 h each in X, Y, and Z directions	
	Shock resistance		150 m/s^2, 3 times each in ±X, ±Y, ±Z directions	
Reliability	MTBF		135,000 hrs min. (Refer to page 12 *Reference Value*)	
	Life expectancy ✻11		10 years min.	
Construction	Weight		700 g max.	1150 g max.
	Cooling fan		No	
	Degree of protection		IP20 by EN/IEC 60529	
Standards	Harmonic current emissions		Conforms to EN 61000-3-2	
	EMI	Conducted Emissions	Conforms to EN 61204-3 Class B, EN 55011 Class B	
		Radiated Emissions	Conforms to EN 61204-3 Class B, EN 55011 Class B	
	EMS		Conforms to EN 61204-3 high severity levels	
	Approved Standards		UL Listing: UL 508,ANSI/ISA 12.12.01 cUL: CSA C22.2 No107.1, CSA C22.2 No213 UL UR: UL 60950-1 (Recognition) OVCII (≤ 3000 m) Pol2 cUR: CSA C22.2 No.60950-1 OVCII (≤ 3000 m) Pol2 EN: EN 50178 OVCIII (≤ 2000 m) OVCII (2000 m≤ and≤3000) Pol2, EN 60950-1 OVCII (≤ 3000 m) Pol2 ATEX: EN 60079-0, EN 60079-15 Cert. DEMKO 16 ATEX 1737X 240W: Ex II3G Ex nA IIC T3 Gc, 480W: Ex II3G Ex nA nC IIC T3 Gc IECEx: IEC 60079-0, IEC60079-15 Cert. IECEx UL 16.0105X 240W: Ex nA IIC T3 Gc, 480W: Ex nA nC IIC T3 Gc	
	Conformed Standards		PELV (EN/IEC 60204-1) ✻12	
			EN/IEC 61558-2-16:2009+A1:2013 ✻12	
	Marine Standards ✻12		Lloyd's register DNV GL	
	SEMI		Conforms to F47-0706 (200 to 240 VAC input)	

Note: For notes ✻1 to ✻12, refer to page 4.

✻1. The value is when both rated output voltage and rated output current are satisfied.
✻2. Do not use an inverter output for the product. Inverters with an output frequency of 50/60 Hz are available, but the rise in the internal temperature of the product may result in ignition or burning.
If the input is connected to a UPS, do not connect a UPS with a square-wave output.
Doing so will cause the internal temperature of the product to increase, possibly causing smoking or burning.
✻3. The value for the leakage current is determined according to the Electrical Appliances and Material Safety Act.
✻4. Refer to *Inrush Current, Startup Time, Output Hold Time* on page 12 for details.
✻5. If the output voltage adjuster (V. ADJ) is turned, the voltage will increase by more than 28 V min of the voltage adjustment range. When adjusting the output voltage, confirm the actual output voltage from the product and be sure that the load is not damaged.
✻6. A characteristic when the ambient operating temperature of 25°C.
✻7. This is the maximum variation in the output voltage when the input voltage is gradually changed within the allowable input voltage range at the rated output voltage and rated output current.
✻8. 100 to 240 VAC input, in the range of 0 A to the rated output current.
✻9. Refer to *Overvoltage Protection* on page 12 for the time when input voltage shuts off and input turns on again.
✻10. At -40 to -25°C, time will be required before the rated output voltage is output after the input voltage is input.
Also, the ripple noise value may exceed the value shown in the above table.
✻11. Refer to *Recommended Replacement Periods and Periodic Replacement for Preventive Maintenance* on page 23 for details.
✻12. Refer to *Standard Compliance*, below.

Standard Compliance

- EN/IEC 61558-2-16
  The S8VK-S was designed based on EN/IEC 61558-2-16.
  Currently, IEC 61558-2-17 has been replaced by IEC 61558-2-16.
  When certification was received for EN/IEC 60204-1 (Machinery Safety), it was necessary to go through a control transformer to the control circuits. However, a control transformer is not always necessary for product that have been certified for the safety standard for OVCIII or for product that use a transformer that conforms to EN/IEC 61558-2-16.
- Safety Standards for a DC Input
  The following safety standards are applicable for when a DC input is used: UL 60950-1, cUR (CSA C22.2 No. 60950-1), EN 50178, EN 60950-1, Lloyd's, and DNV GL.
  Safety standard compliance is achievable by connecting a UL-certified fuse as specified below.
  Select an external fuse that satisfies the following conditions:
  S8VK-S03024: 350 VDC min., 6 A
  S8VK-S06024: 350 VDC min., 6 A
  S8VK-S12024: 350 VDC min., 8 A
  S8VK-S24024: 350 VDC min., 8 A
  S8VK-S48024: 350 VDC min., 12 A
- Conformance to Marine Standards
  Noise filter “FN2080-10-06” manufactured by SCHAFFNER Corporation. or equivalent should be connected to the Input terminals of S8VK-S series (Except 60 W).
  End Plate (PFP-M) to both sides of the Power Supply to hold the Power Supply in place.
  Install clamp filters (“ZCAT2035-0930” manufactured by TDK) on the cables connected to the input and output terminals for 240- and 480-W models.
- To comply with PELV output requirements for EN/IEC 60204-1, ground the negative side of the output (-V) to a protective earth (PE).
- ATEX/IECEx
  The Power Supply must be built-in an IP54 enclousure.

Connections

Block Diagrams

S8VK-S03024 (30 W)
S8VK-S06024 (60 W)

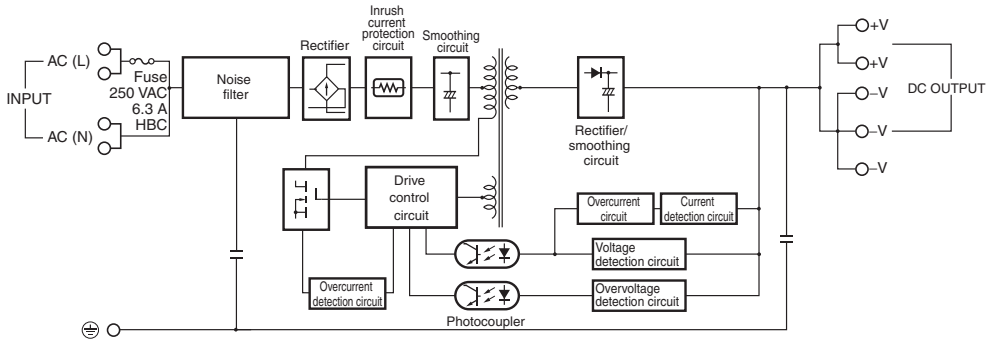

S8VK-S12024 (120 W)

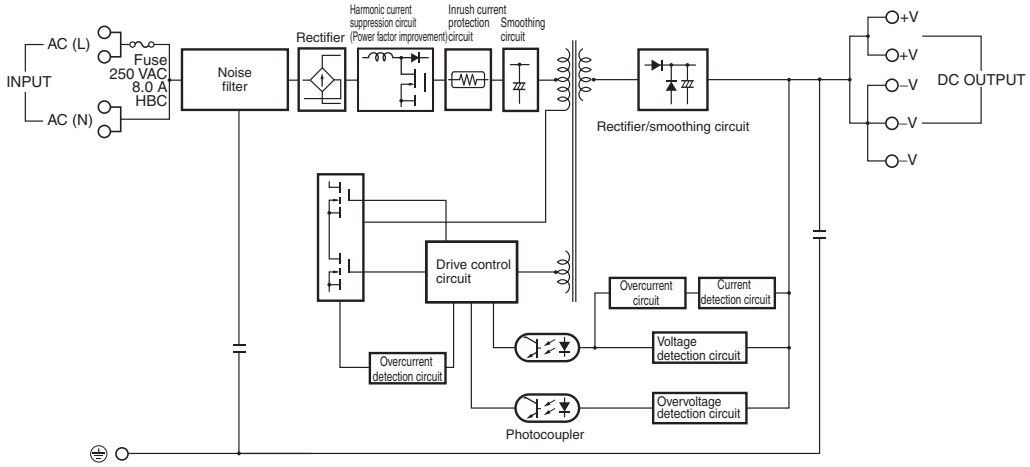

S8VK-S24024 (240 W)

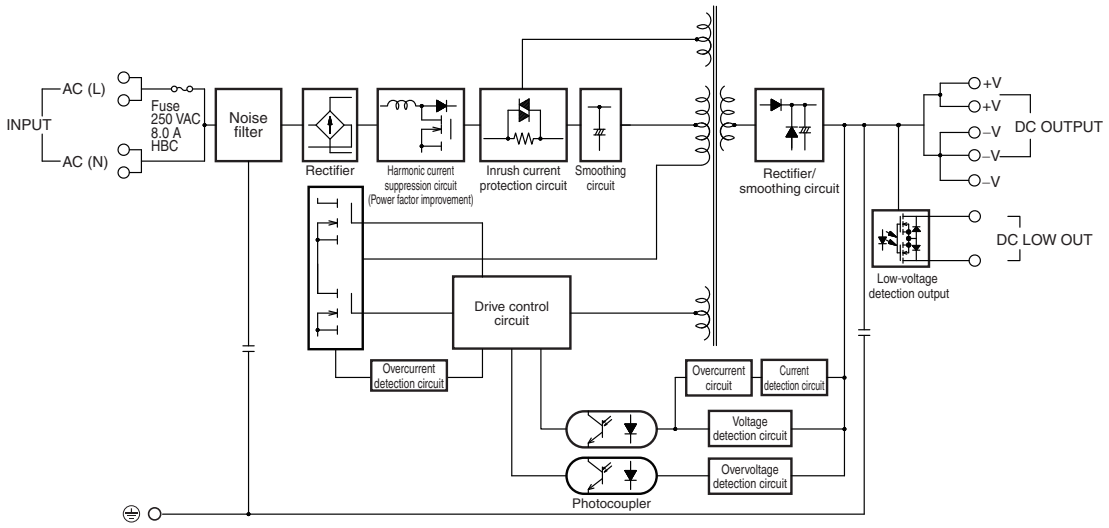

S8VK-S48024 (480 W)

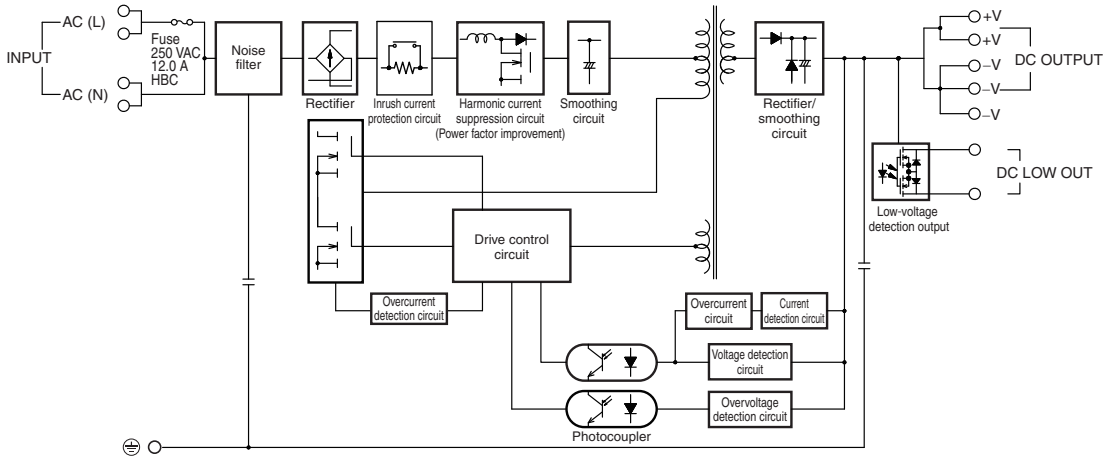

Construction and Nomenclature

Nomenclature

30-W and 60-W Models

S8VK-S03024
S8VK-S06024

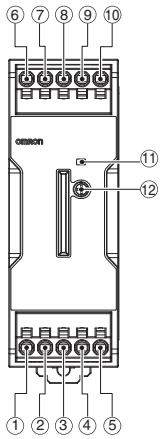

120-W Models

S8VK-S12024

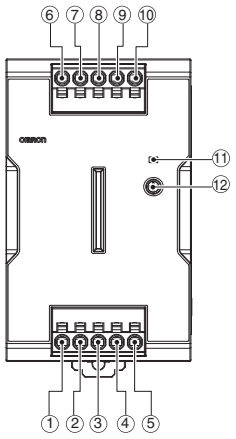

240-W Models

S8VK-S24024

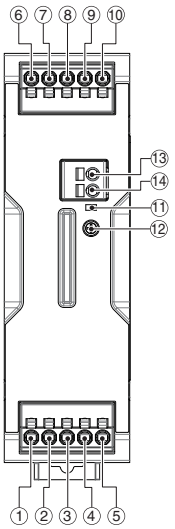

480-W Models

S8VK-S48024

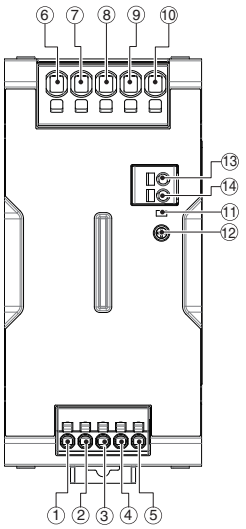

No.	Terminal name	Name	Function
1	L1	Input terminals	Connect the input lines to these terminals. ∗1
2	L2		
3	N1		
4	N2		
5	PE	Protective Earth terminal (PE)	Connect the ground line to this terminal. ∗2
6	+V1	DC Output terminals	Connect the load lines to these terminals.
7	+V2		
8	-V1		
9	-V2		
10	-V3		
11	---	Output indicator (DC ON: Green)	The green indicator indicates when a DC voltage is being output.
12	---	Output voltage adjuster (V.ADJ)	Use to adjust the voltage.
13	DC LOW1	Low-voltage detection output terminals	Low-voltage detection output signal wire is connected.
14	DC LOW2		

∗1. The fuse is located on the (L) side. It is not user-replaceable. For a DC input, connect the positive voltage to the L terminal.
∗2. This is the protective earth terminal specified in the safety standards. Always ground this terminal.

Engineering Data

Derating Curve

30, 60 W (S8VK-S03024, S8VK-S06024)
Horizontal separation: 15 mm or more

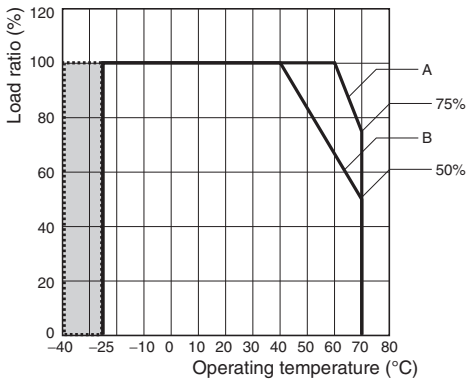

Note: 1. At less than 90 VAC, derate the load at 2.5%/V.
2. For a DC input, reduce the load given in the above derating curve by multiplying by the following coefficients.
S8VK-S03024: 0.9
S8VK-S06024: 0.9
3. In the shaded area, time is required to reach the rated output voltage after the input voltage is applied. Also, the ripple noise value in this area may exceed the range given on page 2.

A. Standard mounting, mounted with Front-mounting Bracket, or mounted with Side-mounting Bracket
B. Face-up mounting

30, 60 W (S8VK-S03024, S8VK-S06024)
Horizontal separation: Less than 15 mm

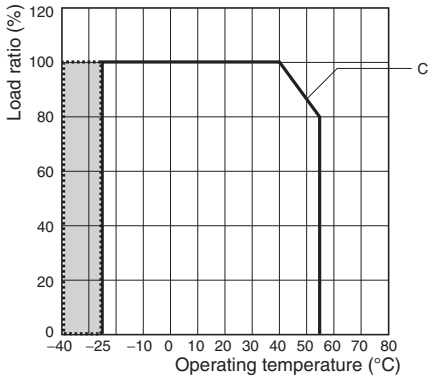

Note: 1. Apply the rated voltage
2. In the shaded area, time is required to reach the rated output voltage after the input voltage is applied. Also, the ripple noise value in this area may exceed the range given on page 2.

C. Front, Side-by-side Mounting

120 W (S8VK-S12024)
Horizontal separation: 15 mm or more

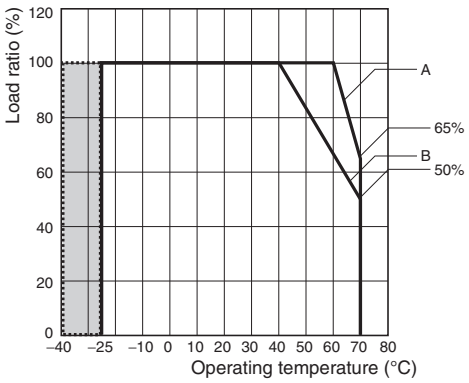

Note: 1. At less than 90 VAC, derate the load at 2.5%/V.
2. For a DC input, reduce the load given in the above derating curve by multiplying by the following coefficients.
S8VK-S12024: 0.9
3. In the shaded area, time is required to reach the rated output voltage after the input voltage is applied. Also, the ripple noise value in this area may exceed the range given on page 2.

A. Standard mounting
B. Face-up mounting

120 W (S8VK-S12024)
Horizontal separation: Less than 15 mm

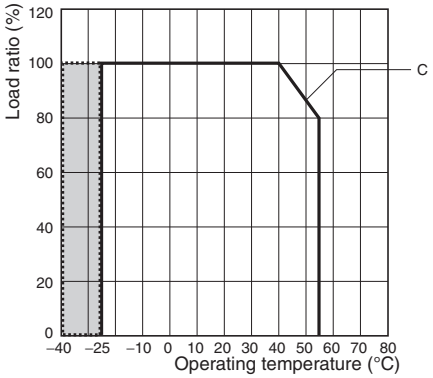

Note: 1. Apply the rated voltage
2. In the shaded area, time is required to reach the rated output voltage after the input voltage is applied. Also, the ripple noise value in this area may exceed the range given on page 2.

C. Front, Side-by-side Mounting

240 W (S8VK-S24024) Horizontal separation: 15 mm or more

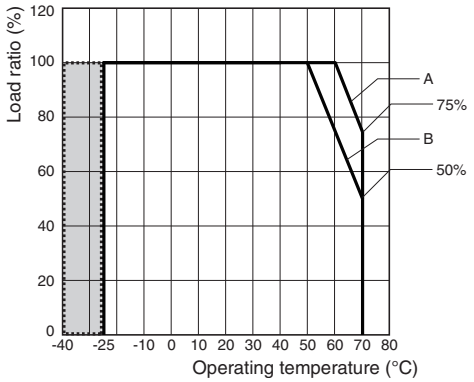

Note: 1. At less than 90 VAC, derate the load at 2.5%/V.
2. For a DC input, reduce the load given in the above derating curve by multiplying by the following coefficients.
S8VK-S24024: 0.8
3. In the shaded area, time is required to reach the rated output voltage after the input voltage is applied. Also, the ripple noise value in this area may exceed the range given on page 3.

A. Standard mounting, mounted with Front-mounting Bracket
B. Face-up mounting

240 W (S8VK-S24024) Horizontal separation: Less than 15 mm

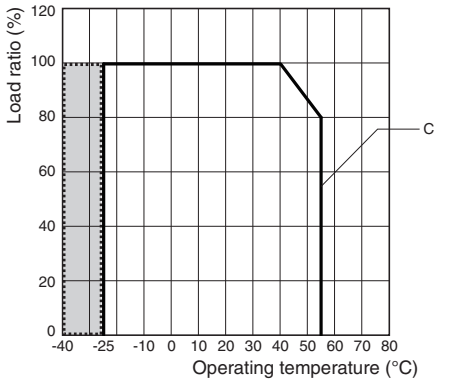

Note: 1. Apply the rated voltage
2. In the shaded area, time is required to reach the rated output voltage after the input voltage is applied. Also, the ripple noise value in this area may exceed the range given on page 3.

C. Front, Side-by-side Mounting

480 W (S8VK-S48024) Horizontal separation: 15 mm or more

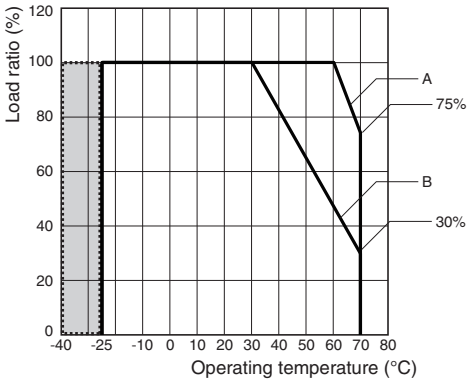

Note: 1. At less than 100 VAC, derate the load at 1%/V.
2. For a DC input, reduce the load given in the above derating curve by multiplying by the following coefficients.
S8VK-S48024: 0.8
3. In the shaded area, time is required to reach the rated output voltage after the input voltage is applied. Also, the ripple noise value in this area may exceed the range given on page 3.

A. Standard mounting, mounted with Front-mounting Bracket
B. Face-up mounting

480 W (S8VK-S48024) Horizontal separation: Less than 15 mm

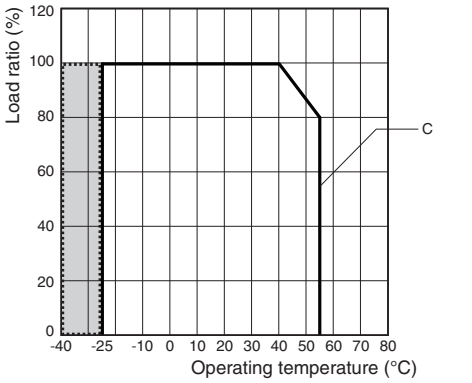

Note: 1. Apply the rated voltage
2. In the shaded area, time is required to reach the rated output voltage after the input voltage is applied. Also, the ripple noise value in this area may exceed the range given on page 3.

C. Front, Side-by-side Mounting

This Power Supply can be used at an altitude of 3,000 m.
Between 2,000 and 3,000 m, derate the load according to the following derating curve.

30, 60 W (S8VK-S03024, S8VK-S06024)
Horizontal separation: 15 mm or more

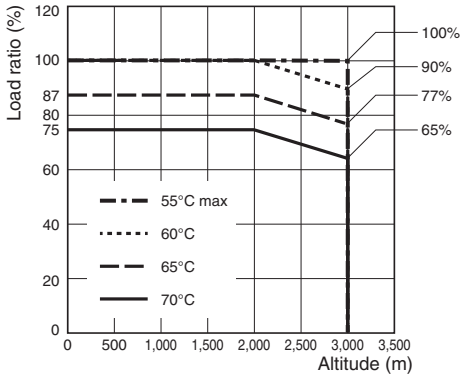

Note: 1. At less than 90 VAC, derate the load at 2.5%/V.
2. For a DC input, reduce the load given in the above derating curve by multiplying by the following coefficients.
S8VK-S03024: 0.9
S8VK-S06024: 0.9

Standard mounting, mounted with Front-mounting Bracket, or mounted with Side-mounting Bracket

120 W (S8VK-S12024)
Horizontal separation: 15 mm or more

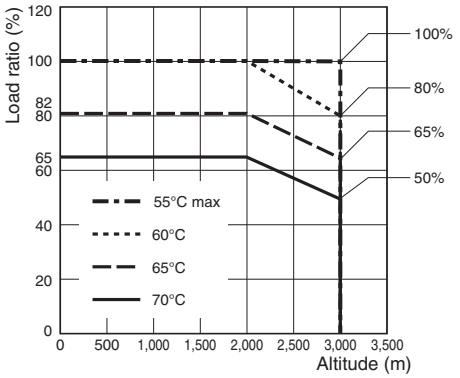

Note: 1. At less than 90 VAC, derate the load at 2.5%/V.
2. For a DC input, reduce the load given in the above derating curve by multiplying by the following coefficients.
S8VK-S12024: 0.9

Standard mounting

30, 60 W (S8VK-S03024, S8VK-S06024)
Horizontal separation: Less than 15 mm

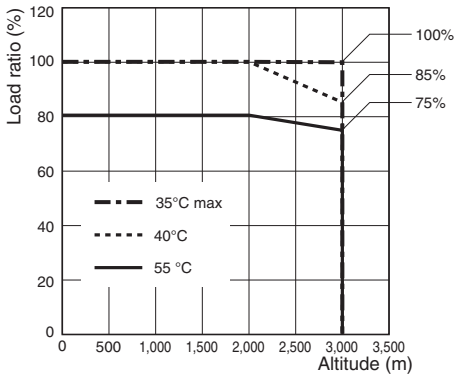

Note: 1. Apply the rated voltage

Front, Side-by-side mounting

120 W (S8VK-S12024)
Horizontal separation: Less than 15 mm

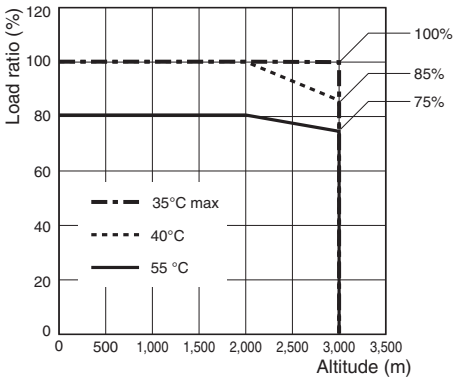

Note: 1. Apply the rated voltage

Front, Side-by-side mounting

240 W (S8VK-S24024) Horizontal separation: 15 mm or more

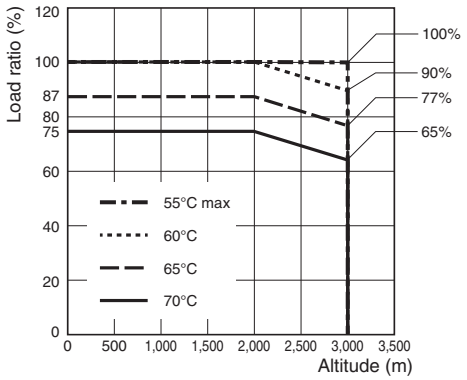

Note: 1. At less than 90 VAC, derate the load at 2.5%/V.
2. For a DC input, reduce the load given in the above derating curve by multiplying by the following coefficients.
S8VK-S24024: 0.8

Standard mounting, mounted with Front-mounting Bracket

480 W (S8VK-S48024) Horizontal separation: 15 mm or more

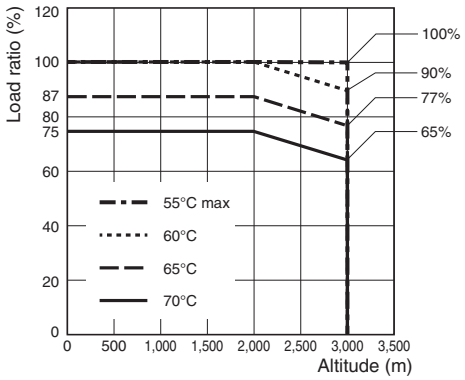

Note: 1. At less than 100 VAC, derate the load at 1%/V.
2. For a DC input, reduce the load given in the above derating curve by multiplying by the following coefficients.
S8VK-S48024: 0.8

Standard mounting, mounted with Front-mounting Bracket

240 W (S8VK-S24024) Horizontal separation: Less than 15 mm

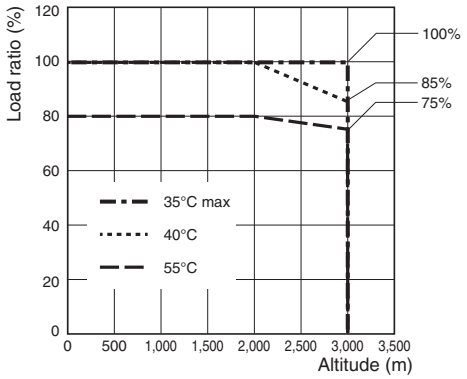

Note: 1. Apply the rated voltage

Front, Side-by-side mounting

480 W (S8VK-S48024) Horizontal separation: Less than 15 mm

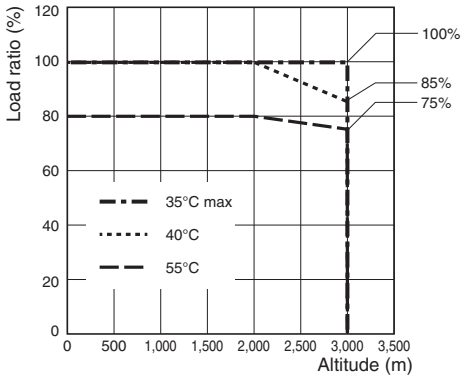

Note: 1. Apply the rated voltage

Front, Side-by-side mounting

Mounting

(A) Standard (Vertical) mounting (B) Face-up mounting (C) Front, Side-by-side mounting ✻

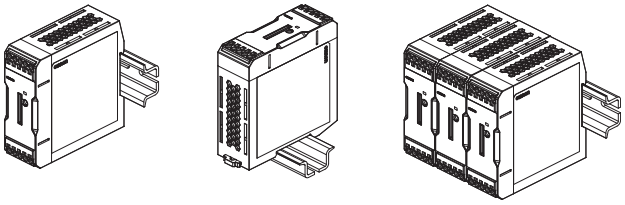

✻ For front, side-by-side mounting, see page 18.

Overload Protection

For models S8VK-S03024, S8VK-S06024 and S8VK-S12024, the output voltage is automatically reduced, and the unit is protected from short circuit current and overcurrent damage if the load current 121% to 160% of the rated current. For models S8VK-S24024 and S8VK-S48024, the output voltage is automatically reduced, and the unit is protected from short circuit current and overcurrent damage if the load current 151% to 165% of the rated current.
When the output voltage returns within the rated range, overload protection is automatically cleared.

S8VK-S03024, S8VK-S06024, S8VK-S12024

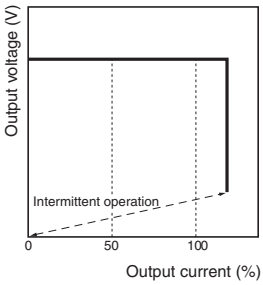

S8VK-S24024, S8VK-S48024

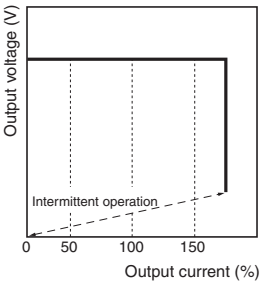

Note: 1. Internal parts may occasionally deteriorate or be damaged if a short-circuited or overcurrent state continues during operation.
2. Internal parts may possibly deteriorate or be damaged if the Power Supply is used for applications with frequent inrush current or overloading at the load end. Do not use the Power Supply for such applications.

Overvoltage Protection

Consider the possibility of an overvoltage and design the system so that the load will not be subjected to an excessive voltage even if the feedback circuit in the Power Supply fails. If an excessive voltage that is approximately 130% of the rated voltage or more is output, the output voltage is shut OFF. Reset the input power by turning it OFF for at least three minutes and then turning it back ON again.
Note: Do not turn ON the power again until the cause of the overvoltage has been removed.

Inrush Current, Startup Time, Output Hold Time

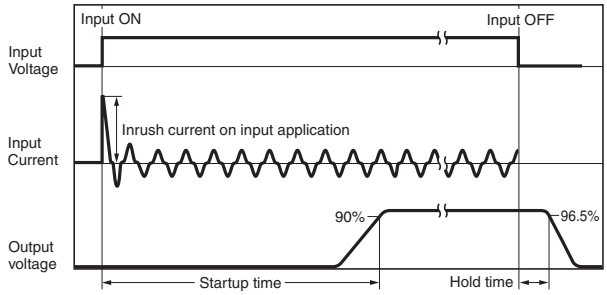

Note: Twice the normal inrush current will flow during parallel operation or for backup operation. Also, if crossover wiring is used for N number of Power Supplies, an inrush current of N times the inrush current for a standalone Power Supply will flow.
Therefore, check the fusing characteristics of fuses and operating characteristics of breakers making sure that the external fuses will not burn out and the circuit breakers will not be activated by the inrush current.

Two phases application for Single phase models

For All Single phase Models, S8VK-S

Basically OMRON single phase power supply can be used on two-phases of a 3–phase-system when some of conditions satisfy like below.

1. The supplying voltage is below the maximum rated input.
   OMRON Power supply allows the input voltage equivalent or less than 240 VAC+10%.
   Please confirm the input voltage between two lines if the input voltage satisfies this condition before connecting.
2. The external protector is needed on N input line to secure a safety.
   N line has no protection of a fuse internally.
   An appropriate fuse or circuit breaker should be connected on N input line like the following.

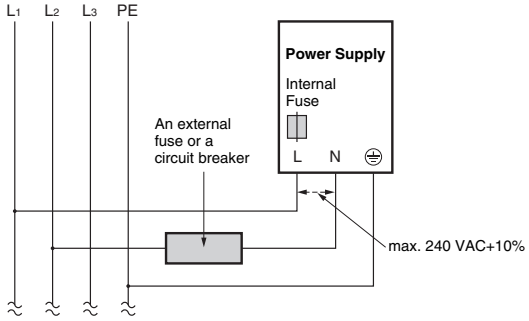

Low-voltage detection output (Only for 240 and 480 W)

Output externally by photo-switch when an output voltage drop is detected (OFF when an output drop occurs). The detection voltage is set to about 80% (75% to 90%) of the rated output voltage.

Photo-switch
1. 30 VDC max., 50 mA max. Residual voltage 2 V or less when ON. Leakage current 0.1 mA or less when OFF.
2. The low-voltage detection output function monitors the voltage of the output terminal of the power supply.
   To check the precise voltage state, measure the voltage of the load end.
3. If the set voltage is less than 90% of the rated voltage, the low-voltage detection function may activate.
4. The signal output circuit do not contain current-limiting circuit. Do not allow the output current to exceed 50 mA.
5. After you complete the wiring, confirm that operation is correct.

Reference Value

	Value
Reliability (MTBF)	Single phase model 30 W: 640,000 60 W: 640,000 120 W: 480,000 240 W: 390,000 480 W: 330,000
Definition	MTBF stands for Mean Time Between Failures, which is calculated according to the probability of accidental device failures, and indicates reliability of devices. Therefore, it does not necessarily represent a life of the product.
Life expectancy	10 yrs. Min.
Definition	The life expectancy indicates average operating hours under the ambient temperature of 40°C and a load rate of 50%. Normally this is determined by the life expectancy of the built-in aluminum electrolytic capacitor.

Dimensions

(Unit: mm)

S8VK-S03024 (30 W)
S8VK-S06024 (60 W)

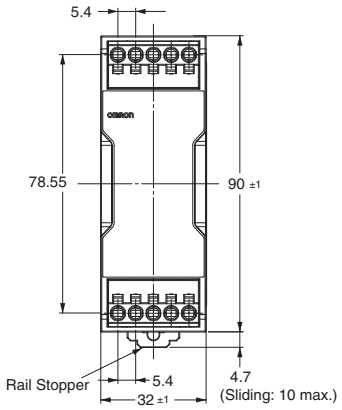

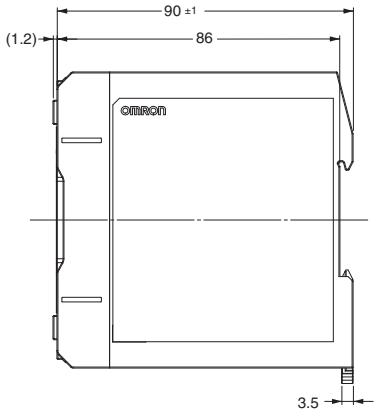

S8VK-S12024 (120 W)

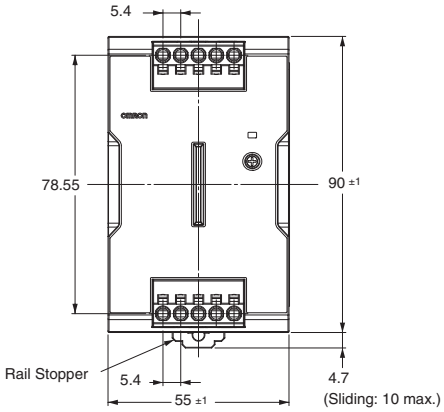

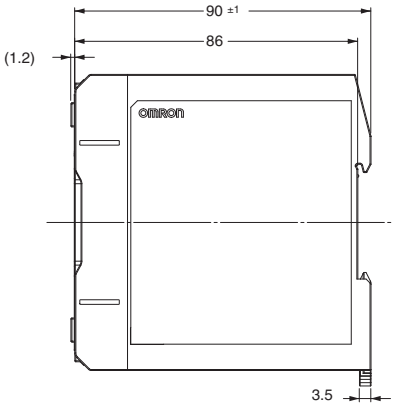

S8VK-S24024 (240 W)

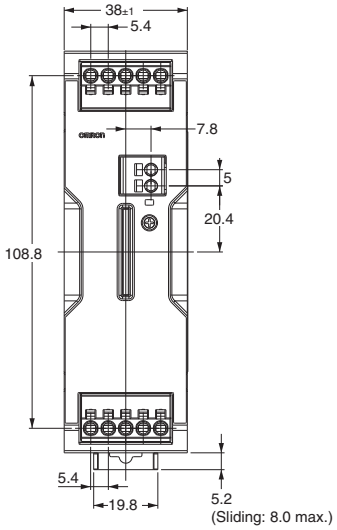

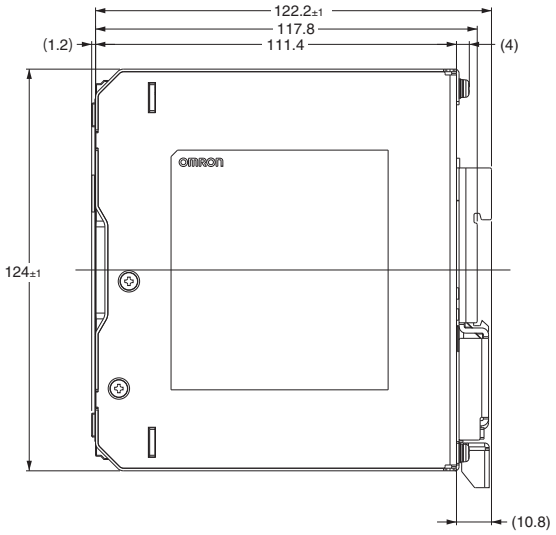

S8VK-S48024 (480 W)

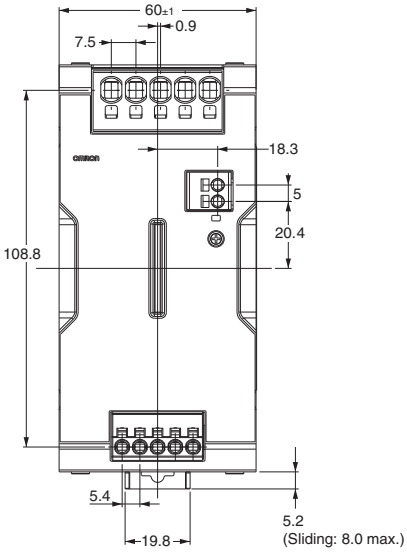

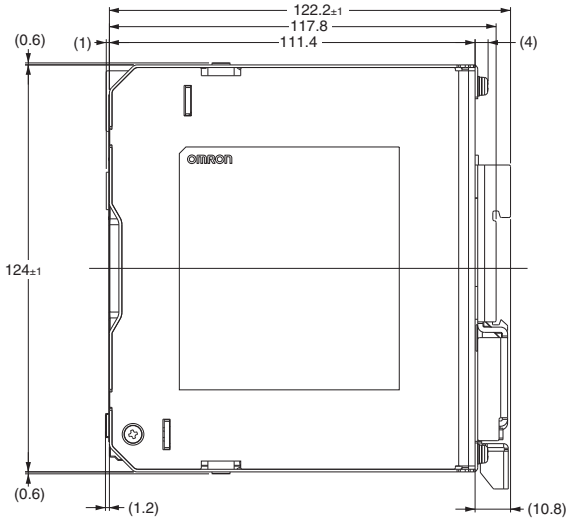

DIN Rail (Order Separately)

(Unit: mm)

Mounting Rail (Material: Aluminum)

PFP-100N
PFP-50N

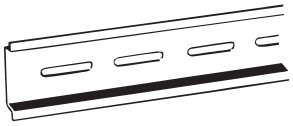

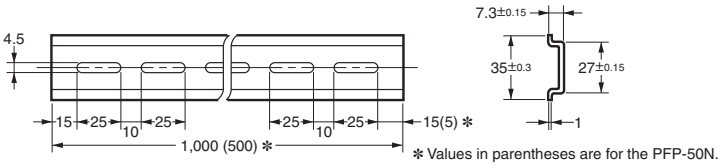

Mounting Rail (Material: Aluminum)

PFP-100N2

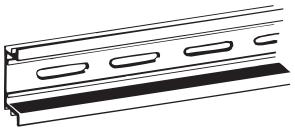

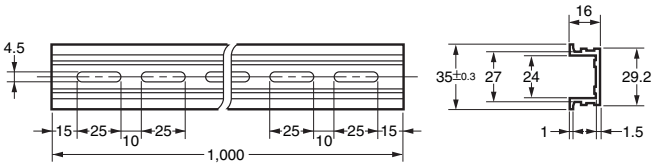

End Plate

PFP-M

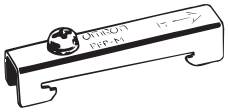

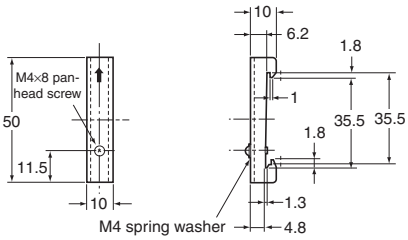

Note: If there is a possibility that the Unit will be subject to vibration or shock, use a steel DIN Rail. Otherwise, metallic filings may result from aluminum abrasion.

Mounting Brackets

Name	Model
Front-mounting bracket (for 30 W and 60 W models)	**S82Y-VS10F**
Side-mounting bracket (for 30 W and 60 W models)	**S82Y-VS10S**
Front-mounting bracket (for 240 W and 480 W models)	**S82Y-VK10F**

Note: Be sure to use the accessory screws.
Mounting screw tightening torque (recommended): 4.43 to 5.31 lb-in (0.5 to 0.6 N·m)

Type	Model	Dimensions	Appearance
Front-mounting bracket (For 30 W and 60 W models)	**S82Y-VS10F**	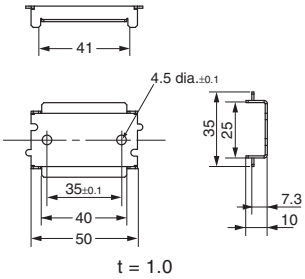	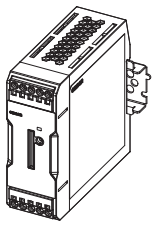
Side-mounting bracket (For 30 W and 60 W models)	**S82Y-VS10S**	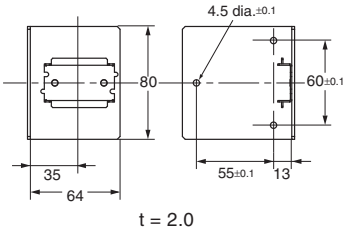	Left-side mounting Right-side mounting 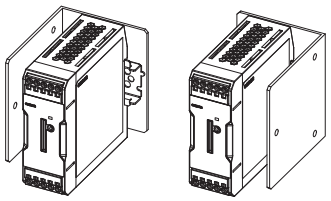
Front-mounting bracket (For 240 W and 480 W models)	**S82Y-VK10F**	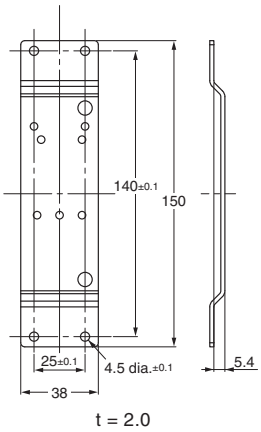 240 W Three locations Mounting screw tightening torque: 0.5 to 0.6 N·m 480 W Four locations Mounting screw tightening torque: 0.5 to 0.6 N·m Be sure to use the accessory screws.	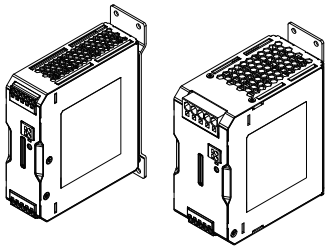

Safety Precautions

Warning Indications

WARNING	Indicates a potentially hazardous situation which, if not avoided, will result in minor or moderate injury, or may result in serious injury or death. Additionally, there may be significant property damage.
CAUTION	Indicates a potentially hazardous situation which, if not avoided, may result in minor or moderate injury or in property damage.
Precautions for Safe Use	Supplementary comments on what to do or avoid doing, to use the product safely.
Precautions for Correct Use	Supplementary comments on what to do or avoid doing, to prevent failure to operate, malfunction or undesirable effect on product performance.

Meaning of Product Safety Symbols

	Used to warn of the risk of electric shock under specific conditions.
	Used to warn of the risk of minor injury caused by high temperatures.
	Use to indicate prohibition when there is a risk of minor injury from electrical shock or other source if the product is disassembled.
	Used for general mandatory action precautions for which there is no specified symbol.

WARNING

Electrical shock may occur if the terminal comes off. Insert the solid wire or ferrule straight into the terminal block until the end touches the terminal block.

CAUTION

Minor electric shock, fire, or Product failure may occasionally occur. Do not disassemble, modify, or repair the Product or touch the interior of the Product.

Minor burns may occasionally occur. Do not touch the Product while power is being supplied or immediately after power is turned OFF.

Minor injury due to electric shock may occasionally occur. Do not touch the terminals while power is being supplied. Always close the terminal cover after wiring.

Minor electric shock, fire, or Product failure may occasionally occur. Do not allow any pieces of metal or conductors or any clippings or cuttings resulting from installation work to enter the Product.

Precautions for Safe Use

Installation Environment

- Do not use the Power Supply in locations subject to shocks or vibrations. In particular, install the Power Supply as far away as possible from contactors or other devices that are a vibration source. For usage onboard a ship, always attach an End Plate (PFP-M) to both sides of the Power Supply to hold the Power Supply in place.
- Install the Power Supply well away from any sources of strong, high-frequency noise and surge.

Operating Life

- The life of a Power Supply is determined by the life of the electrolytic capacitors used inside. Here, Arrhenius Law applies, i.e., the life will be cut in half for each rise of 10°C or the life will be doubled for each drop of 10°C. The life of the Power Supply can thus be increased by reducing its internal temperature.

Ambient Operating and Storage Environments

- Store the Power Supply at a temperature of -40 to 85°C and a humidity of 95% or less.
- Do not use the Power Supply in areas outside the derating curve otherwise, internal parts may occasionally deteriorate or be damaged.
- Use the Power Supply at a humidity of 95% max.
- Do not use the Power Supply in locations subject to direct sunlight.
- Do not use the Power Supply in locations where liquids, foreign matter, or corrosive gases may enter the interior of Power Supply.

Mounting

- Take adequate measures to ensure proper heat dissipation to increase the long-term reliability of the Power Supply. Be sure to allow convection in the atmosphere around devices when mounting. Do not use in locations where the ambient temperature exceeds the range of the derating curve.
- When cutting out holes for mounting, make sure that cuttings do not enter the interior of the Power Supplies.
- The internal parts may occasionally deteriorate and be broken due to adverse heat radiation. Do not loosen the screws on the Power Supply.

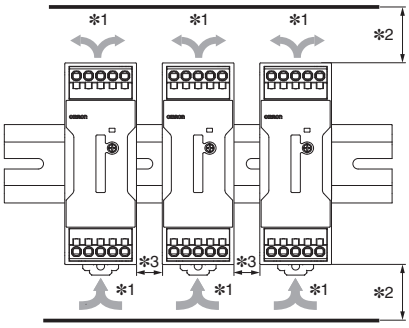

***1.** Convection of air
***2.** Vertical separation: 25 mm or more (S8VK-S03024, S06024, S12024)
Vertical separation: 23 mm or more (S8VK-S24024, S48024)
***3.** Horizontal separation: 15mm or more

- The following combinations are possible for *(C) Front, Side-by-side mounting* indicated under *Mounting* on page 12.
  - Same models
  - S8VK-S03024, S8VK-S06024 and S8VK-S12024
  - S8VK-S24024 and S8VK-S48024

  Use the Product within the derating curve for the front, side-by-side mounting.

DIN Rail Mounting

To mount the Block on a DIN Rail, hook portion (A) of the Block onto the rail and press the Block in direction (B).

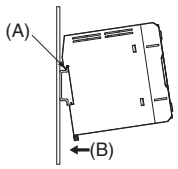

To dismount the Block, pull down portion (C) with a flat-blade screwdriver and pull out the Block.

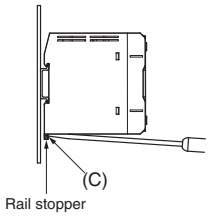

Wiring

- Connect the ground completely. A protective earthing terminal stipulated in safety standards is used. Electric shock or malfunction may occur if the ground is not connected completely.
- Minor fire may possibly occur. Ensure that input and output terminals are wired correctly.
- When you insert wires or insert a screwdriver into a release hole, do not press down on the terminal block with a force of 40 N or greater.
- Do not wire anything to the release holes.
- Do not tilt or twist a flat-blade screwdriver while it is inserted into a release hole on the terminal block. The terminal block may be damaged.
- Insert a flat-blade screwdriver into the release holes at an angle. The terminal block may be damaged if you insert the screwdriver straight in.
- Do not allow the flat-blade screwdriver to fall out while it is inserted into a release hole.
- Do not bend a wire past its natural bending radius or pull on it with excessive force. Doing so may cause the wire disconnection.
- Do not insert more than one wire into each terminal insertion hole.
- Do not pre-solder the ends of the wires. Doing so will inhibit proper connection.
- Be sure to remove the sheet covering the Product for machining before power-ON so that it does not interfere with heat dissipation.
- Make sure to use stranded wires or wires with ferrules when there is a possibility of vibration or impact.
- To prevent wiring materials from smoking or ignition, confirm wire ratings and use the wiring materials given in the following table.

Terminal name	Model	Recommended wire gauge	Solid/stranded wire
		(mm^2)	(AWG)
Input terminal	S8VK-S03024, S06024, S12024	0.34 to 2.5	22 to 14
	S8VK-S24024	0.5 to 2.5	20 to 14
	S8VK-S48024	0.75 to 2.5	18 to 14
DC output terminal	S8VK-S03024, S06024	0.5 to 2.5	20 to 14
	S8VK-S12024	0.75 to 2.5	18 to 14
	S8VK-S24024	2 to 2.5	14
	S8VK-S48024	3.5 to 6	12 to 10
Low-voltage detection output	S8VK-S24024, S48024	0.25 to 2.5	24 to 14
PE (protective earth) terminal	S8VK-S03024, S06024, S12024, S24024, S48024	2 to 2.5	14

- Input crossover wiring can be used for the input side of this Power Supply.

- With the S8VK-S03024, S8VK-S06024 and S12024 models, do not use crossover wiring for more than Power Supplies, and do not allow the steady-state current to the input terminals to exceed 5 A. With the S8VK-S24024 and S48024 models, do not use crossover wiring for more than Power Supplies, and do not allow the steady-state current to the input terminals to exceed 10 A. The table gives the recommended wires for one Power Supply.
- If you use crossover wiring for N number of Power Supplies, a current that is N times the current for a standalone Power Supply may flow to the input terminals. Take this into consideration when you select wiring materials.

Stripping length

S8VK-S03024, S06024, S12024, S24024: Input and Output Terminals
S8VK-S48024: Input Terminals

Recommended Wire	Stripping length (Ferrules not used)
0.34 to 1.5 mm^2/AWG 22 to 16	8 mm
2 to 2.5 mm^2/AWG 14	10 mm

S8VK-S48024: Output Terminals

Recommended Wire	Stripping length (Ferrules not used)
3.5 to 6 mm^2/AWG 12 to 10	15 mm

S8VK-S24024, S48024: Low-voltage detection output Terminals

Recommended Wire	Stripping length (Ferrules not used)
0.25 to 2.5 mm^2/AWG 24 to 14	10 mm

● Connecting Wires to the Push-In Plus Terminal Block

Part Names of the Terminal Block

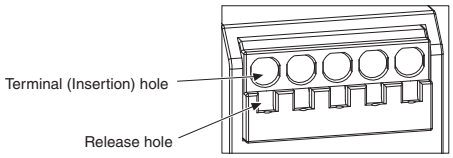

Connecting Wires with Ferrules and Solid Wires

Insert the solid wire or ferrule straight into the terminal block until the end strikes the terminal block.

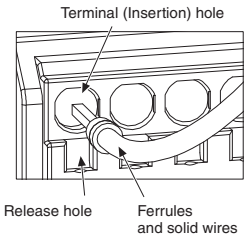

If a wire is difficult to connect because it is too thin, use a flat-blade screwdriver in the same way as when connecting stranded wire.

Connecting Stranded Wires

Use the following procedure to connect the wires to the terminal block.

1. Hold a flat-blade screwdriver at an angle and insert it into the release hole. The angle should be between 10° and 15°.
   If the flat-blade screwdriver is inserted correctly, you will feel the spring in the release hole.
2. With the flat-blade screwdriver still inserted into the release hole, insert the wire into the terminal hole until it strikes the terminal block.
3. Remove the flat-blade screwdriver from the release hole.

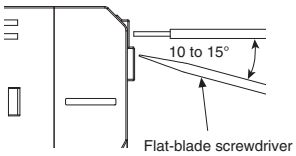

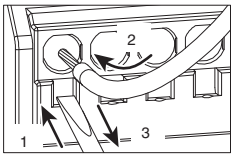

Checking Connections

- After the insertion, pull gently on the wire to make sure that it will not come off and the wire is securely fastened to the terminal block.
- The insulation distance is still satisfied although some of the conductor may still be visible after being inserted into the terminal block, even though the recommended ferrule is used.

● Removing Wires from the Push-In Plus Terminal Block

Use the following procedure to remove wires from the terminal block. The same method is used to remove stranded wires, solid wires, and ferrules.

1. Hold a flat-blade screwdriver at an angle and insert it into the release hole.
2. With the flat-blade screwdriver still inserted into the release hole, remove the wire from the terminal insertion hole.
3. Remove the flat-blade screwdriver from the release hole.

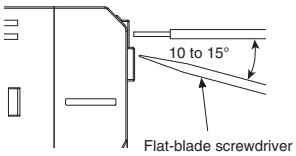

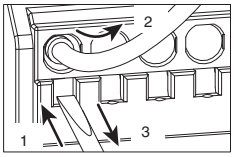

● Recommended Ferrules and Crimping Tools

Recommended ferrules

S8VK-S03024, S06024, S12024, S24024: Input and Output Terminals
S8VK-S48024: Input Terminals
S8VK-S24024, S48024: Low-voltage detection output Terminals

Applicable wire		Ferrule Conductor length (mm)	Stripping length (mm) (Ferrules used)	Recommended ferrules		
(mm²)	(AWG)			Manufactured by Phoenix Contact	Manufactured by Weidmuller	Manufactured by Wago
0.25	24	8	10	AI 0,25-8	H0.25/12	216-301
		10	12	AI 0,25-10	---	---
0.34	22	8	10	AI 0,34-8	H0.34/12	216-302
		10	12	AI 0,34-10	---	---
0.50	20	8	10	AI 0,5-8	H0.5/14	216-201
		10	12	AI 0,5-10	H0.5/16	216-241
0.75	18	8	10	AI 0,75-8	H0.75/14	216-202
		10	12	AI 0,75-10	H0.75/16	216-242
1/1.25	18/17	8	10	AI 1-8	H1.0/14	216-203
		10	12	AI 1-10	H1.0/16	216-243
1.25/1.5	17/16	8	10	AI 1,5-8	H1.5/14	216-204
		10	12	AI 1,5-10	H1.5/16	216-244
2.5	14	10	12	AI 2,5-10	H2.5/16DS	216-246
Recommended crimp tool				CRIMPFOX6 CRIMPFOX6-F CRIMPFOX10S	PZ6 roto	Variocrimp4

Note: 1. Make sure that the outer diameter of the wire is smaller than the inner diameter of the insulating sleeve of the recommended ferrule.
2. Make sure that the ferrule processing dimensions conform to the following figure.

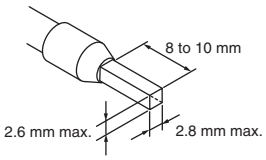

S8VK-S48024: Output Terminals

Applicable wire		Ferrule Conductor length (mm)	Stripping length (mm) (Ferrules used)	Recommended ferrules		
(mm²)	(AWG)			Manufactured by Phoenix Contact	Manufactured by Weidmuller	Manufactured by Wago
3.5	12	12	14	AI 4-12	H4.0/20D	216-267
6	10	12	16	AI 6-12	H6.0/20	216-208 ✻
Recommended crimp tool				CRIMPFOX6 CRIMPFOX6T-F CRIMPFOX10S	PZ6 roto	Variocrimp4 ✻ Use the Variocrim p16.

Note: 1. Make sure that the outer diameter of the wire is smaller than the inner diameter of the insulating sleeve of the recommended ferrule.
2. Make sure that the ferrule processing dimensions conform to the following figure.

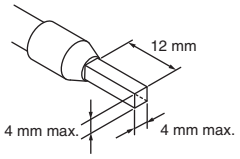

Recommended Flat-blade Screwdriver

Use a flat-blade screwdriver to connect and remove wires.
Use the following flat-blade screwdriver.
The following table shows manufacturers and models as of 2018/Dec.

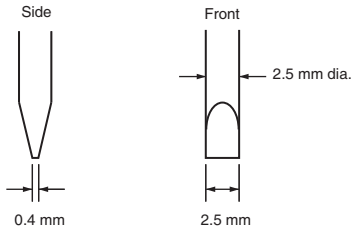

Model	Manufacturer
ESD 0,40×2,5	Wera
SZS 0,4×2,5 SZF 0-0,4×2,5 ✻	Phoenix Contact
0.4×2.5×75 302	Wiha
AEF.2,5×75	Facom
210-719	Wago
SDIS 0.4×2.5×75	Weidmuller
9900(-2.5×75)	Vessel

✻ OMRON's exclusive purchase model XW4Z-00B is available to order as SZF 0-0,4 x 2,5 (manufactured by Phoenix Contact).

Power Boost Function

The boost current is a temporary current that exceeds the rated current.
However, it should meet the following four boost current conditions.

- Time that the boost current flows: t1 ≤ 10 s
- The boost current: Ip ≤ Maximum boost current
- The average output current: Iave ≤ Rated output current
- The time ratio of the boost current flow: Duty ≤ 30%

$$\text{Duty} = \frac{t1}{t1 + t2} \times 100\ [\%] \leq 30\%$$

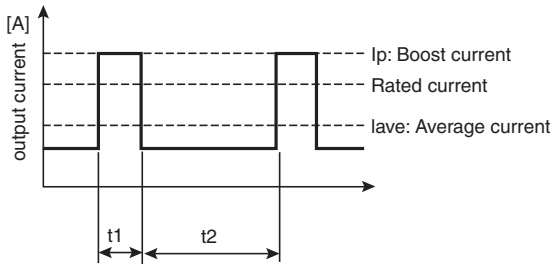

- Do not allow a boost current to flow for more than 10 s.
  Do not allow the duty to exceed 30%. These conditions may damage the Power Supply.
- Do not allow the average current for one cycle of the boost current to exceed the rated current. The Power Supply may be damaged.
- Derate the boost current and the average output current loads according to the ambient operating temperature and mounting direction.

Overcurrent Protection

- Internal parts may possibly deteriorate or be damaged if a short-circuited or overcurrent state continues during operation.
- Internal parts may possibly deteriorate or be damaged if the Power Supply is used for applications with frequent inrush current or overloading at the load end. Do not use the Power Supply for such applications.

Charging a Battery

If you connect a battery as the load, install overcurrent control and overvoltage protection circuits.

Output Voltage Adjuster (V.ADJ)

- The output voltage adjuster (V.ADJ) may possibly be damaged if it is turned with unnecessary force. Do not turn the adjuster with excessive force.
- After completing output voltage adjustment, be sure that the output power or output current does not exceed the rated output electric power or rated output current.

Series Operation

Two Power Supplies can be connected in series.

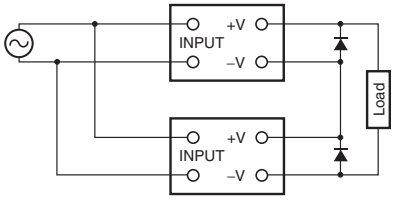

Note: 1. The diode is connected as shown in the figure. If the load is short-circuited, a reverse voltage will be generated inside the product. If this occurs the product may possibly deteriorate or be damaged. Always connect a diode as shown in the figure.
Select a diode having the following ratings.

Type	Schottky Barrier diode
Dielectric strength (VRRM)	Twice the output voltage or above
Forward current (IF)	Twice the rated output current or above

2. Although Products having different specifications can be connected in series, the current flowing through the load must not exceed the smaller rated output current.

Making Positive/Negative Outputs

- The outputs are floating outputs (i.e., the primary circuits and secondary circuits are separated). You can therefore make positive and negative outputs by using two Power Supplies. You can make positive and negative outputs with any of the models.
  If positive and negative outputs are used, connect Power Supplies of the same model as in the following figure. (Combinations with different output capacities or output voltages can be made. However, use the lower of the two maximum rated output currents as the current to the loads.)

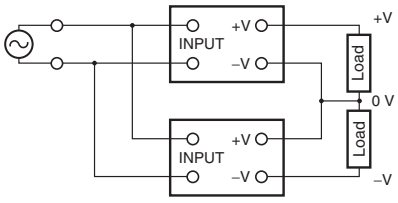

- Depending on the model, internal circuits may be damaged due to startup failure when the power is turned ON if loads such as a servomotor or operational amplifier may operate in series. Therefore, connect bypass diodes (D1, D2) as shown in the following figure.

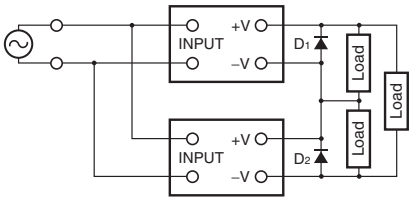

- Use the following information as a guide to the diode type, dielectric strength, and current.

Type	Schottky Barrier diode
Dielectric strength (VRRM)	Twice the output voltage or above
Forward current (IF)	Twice the rated output current or above

Parallel Operation

Parallel operation is used when the output current from one Power Supply is insufficient for the load. Power Supplies are connected in parallel to increase the output current.
Two Power Supplies can be connected in parallel.

- You must meet the following conditions to use parallel operation.
  - Standard mounting.
  - The range of ambient temperature is -25 to 40°C.
    Left and right interval 15 mm or more, Up and down interval 25 mm min. (30, 60, 120W), Up and down interval 23 mm min. (240, 480 W).
  - Rated input voltage range and output voltage of 25 V max.
- <S8VK-S06024 Only>
  The total output current must be 4 A max.
- Adjust the output voltage difference of each Power Supply to 50 mV or less, using the output voltage adjuster (V. ADJ).
- If the output current from the Power Supplies is not balanced, the Power Supply with the higher output voltage will operate in an overcurrent protection state, which will extremely reduce its service life. After you adjust the difference in the output voltages between the Power Supplies, make sure that the currents are well balanced.
- Using the parallel operation will not satisfy UL1310 Class2 output.
- For Parallel Operation, to balance the current of the each unit, the length and thickness of each wire connected to the load and each unit must be same as much as possible.
- If you use the output voltage may drop by several volts if the load changes rapidly (e.g., if the load starts or is disconnected). Use the S8VK-R or connect external diodes as shown in the figure.
  For parallel operation with 30, 60 and 120-W power supplies, use the S8VK-R10 model. For parallel operation with 240-W power supplies, use the S8VK-R20 model.
- Do not use parallel operation when there is the possibility that the input voltage will vary outside of the rated input range.

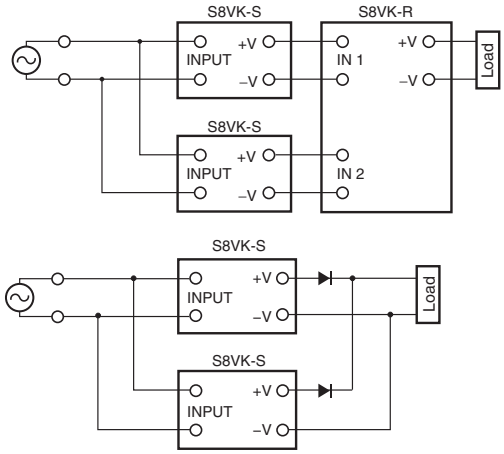

- Use the following information as a guide to the diode type, dielectric strength, and current.

Type	Schottky Barrier diode
Dielectric strength (VRRM)	Twice the output voltage or above
Forward current (IF)	Twice the rated output current or above

Backup Operation

Backup operation is possible if you use two Power Supplies of the same model.
Even if one Power Supplies fails, operation can be continued with the other Power Supply.
Make sure that the maximum load does not exceed the capacity of one Power Supply.
Use the S8VK-R or connect external diodes. For backup operation with 30, 60 and 120-W power supplies, use the S8VK-R10 model. For backup operation with 240-W power supplies, use the S8VK-R20 model.

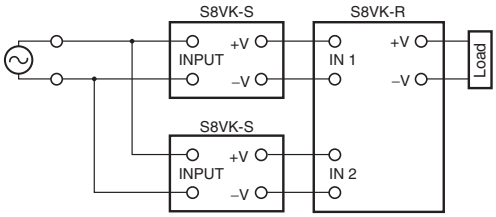

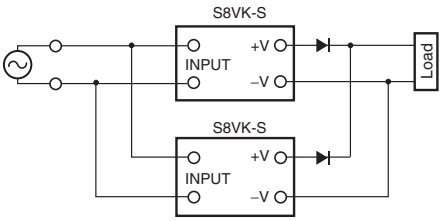

- Use the following information as a guide to the diode type, dielectric strength, and current.

Type	Schottky Barrier diode
Dielectric strength (V_{RRM})	Twice the output voltage or above
Forward current (I_F)	Twice the rated output current or above

In Case There Is No Output Voltage

The possible cause for no output voltage may be that the overcurrent or overvoltage protection has operated. The internal protection may operate if a large amount of surge voltage such as a lightening surge occurs while turning ON the power supply.
In case there is no output voltage, please check the following points before contacting us:

- Checking overload protected status:
  Check whether the load is in overload status or is short-circuited. Remove wires to load when checking.
- Checking overvoltage or internal protection:
  Turn the power supply OFF once, and leave it OFF for at least 3 minutes. Then turn it ON again to see if this clears the condition.

Audible Noise at Power ON

<S8VK-S12024, S8VK-S24024, and S8VK-S48024>

A harmonic current suppression circuit is built into the Power Supply. This circuit can create noise when the input is turned ON, but it will last only until the internal circuits stabilize and does not indicate any problem in the Product.

Period and Terms of Warranty

Warranty Period

The Power Supply warranty is valid for a period of five years from the date of shipment from the factory.

Terms of Warranty

The warranty is valid only for the following operating conditions.

1. Average ambient operating temperature of the Power Supply: 40°C max. (See note.)
2. Average load rate of 80% max. (See note.)
3. Mounting method: Standard mounting
4. Rated input voltage

Note: The maximum ratings must be within the derating curve.

If the Power Supply fails for reasons attributable to OMRON within the above warranty period, OMRON will repair or replace the faulty part of the Power Supply at the place of purchase or the place where the Power Supply delivered without charge.
This warranty does not cover the following types of failures.

(1) Failures that result from handling or operation of the Power Supply under conditions or in environments that are not given in this document and not given in any other specifications exchanged between OMRON and the customer
(2) Failures that originate in causes other than the delivered product itself
(3) Failures caused by disassembly, modification, or repair of the Power Supply by anyone other than OMRON
(4) Failures caused by applications or uses for which the Power Supply was not originally intended
(5) Failures caused by factors that could not be anticipated with the scientific or technical knowledge available when the Power Supply was shipped
(6) Failures caused by other causes for which OMRON is not responsible, such as natural disasters and other acts of God
This warranty is limited to the individual Power Supply that was delivered and does not cover any secondary, subsequent, or related damages.

Recommended Replacement Periods and Periodic Replacement for Preventive Maintenance

The recommended replacement period for preventive maintenance is greatly influenced by the application environment of the Power Supply. As a guideline, the recommended replacement period is 7 to 10 years.✻
To prevent failures or accidents that can be caused by using a Power Supply beyond its service live, we recommend that you replace the Power Supply as early as possible within the recommended replacement period.
However, bear in mind that the recommended replacement period is for reference only and does not guarantee the life of the Power Supply.

Many electronic components are used in the Power Supply and the Power Supply depends on the correct operation of these components to achieve the original Power Supply functions and performance.
However, the influence of the ambient temperature on aluminum electrolytic capacitors is large, and the service life is reduced by half for each 10°C rise in temperature (Arrhenius law).
When the capacity reduction life of the electrolytic capacitor is reached, the Power Supply failures or accidents may occur.
We therefore recommend that you replace the Power Supply periodically to minimize product failures or accidents in advance.

✻ The recommended replacement period applies under the following conditions: rated input voltage, load rate of 50% max., ambient temperature of 40°C max., and the standard mounting method.

This product model is designed with a service life of 10 years minimum under the above conditions.

Noise Filter

S8V-NF (Single-phase 250 V 3 A / 6 A Type)

DIN Rail Mounting Type Ideal for Control Panels Featuring a Slim Design that Saves Space Push-In Connections for Safe and Easy Wiring

- 150 kHz to 1 MHz high attenuation
- Operation possible at ambient temperatures from -40 to 85°C
- Complies with RoHS directives
- Certification for 3,000 m altitude (UL/EN 60939)
- Five years Warranty ✻1

✻1. Refer to “Period and Terms of Warranty” on page 32 for details.

⚠ Refer to “Safety Precautions” on page 29.

Model Number Structure

Model Number Legend

Note: Not all combinations are possible. Refer to List of *Model number* in *Ordering Information*, below.

S8V-NF S 2 □□
1 2 3

1. Input type
S: Single-phase AC/DC

2. Rated voltage
2: 250 VAC/250 VDC

3. Rated current
03: 3 A
06: 6 A

Ordering Information

Note: For details on normal stock models, contact your nearest OMRON representative.

Rated voltage	Rated current	Model number
250 VAC 250 VDC	3 A	**S8V-NFS203**
	6 A	**S8V-NFS206**

Ratings and Characteristics

Item		Rated current	3 A	6 A
		Rated voltage	Single-phase 250 VAC 50/60 Hz ✻1, 250 VDC	
I/O characteristics	Leakage current		1.0 mA max. (250 VAC/60 Hz)	
	DC resistance		110 mΩ max.	
	Attenuation		25 dB min. (Common Mode: 0.1 to 10 MHz, Normal Mode: 0.2 to 30 MHz)	
	Withstand voltage		2.5 kVAC for 1 min. (between line and ground), current cutoff 10 mA	
	Insulation resistance		100 MΩ min. (500 VDC, 1 min.)	
Environment	Ambient operating temperature		-40 to 85°C (Derating is required. Refer to *Engineering Data*) (with no condensation or icing)	
	Derating start temperature		+85°C	+60°C
	Storage temperature		-40 to 85°C (with no condensation or icing)	
	Ambient operating humidity		95% (Storage humidity: 95% max.)	
	Vibration resistance		10 to 55 Hz, maximum 5 G, 0.42 mm half amplitude for 2 h each in X, Y, and Z directions	
	Shock resistance		150 m/s^2, 3 times each in ±X, ±Y, ±Z directions	
Construction	Weight		140 g max.	
	Degree of protection		IP20 by EN/IEC 60529	
Standards	Safety standards		UL 60939 (Recognition) OVC III (≤3000 m) Pol2 CSA C22.2 No.8 EN 60939 OVC III (≤3000 m) Pol2 ENEC ✻2 EAC (TR CU 004 / 2011)	

✻1. If the input is connected to a UPS, do not connect a UPS with a square-wave output. Doing so will cause the internal temperature of the product to increase, possibly causing smoking or damage.
✻2. ENEC is a certification that makes product distribution to EU member countries, EFTA (European Free Trade Association) member countries, and Eastern European countries possible.

Connections

Circuit Diagram

S8V-NFS203
S8V-NFS206

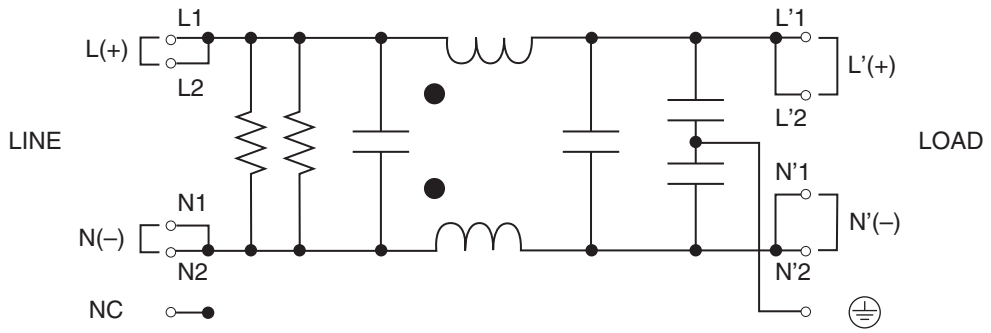

Construction and Nomenclature

Nomenclature

S8V-NFS203, S8V-NFS206

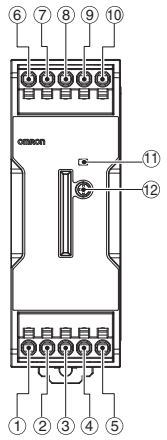

No.	Terminal name	Name	Function
1	L1	Line terminals	Connect the input lines to these terminals. ✻1
2	L2		
3	N1		
4	N2		
5	NC	No connection	Do not wire.
6	L'1	Load terminals	Connect the output lines to these terminals. ✻1
7	L'2		
8	N'1		
9	N'2		
10	PE	Protective Earth terminal (PE)	Connect the ground line to this terminal. ✻2

✻1. Wiring is generally laid out so that the line terminal is connected to the input side and the load terminal is connected to the output side, though use in the opposite direction is also possible.
Note that if the input and output are wired in reverse, the appropriate attenuation characteristics may not be obtained.
✻2. This is the protective earth terminal specified in the safety standards. Always ground this terminal.

Engineering Data

Derating Curves

S8V-NFS203

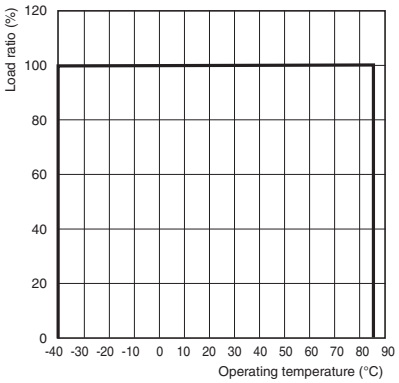

Note: If using at an altitude of 2000 m to 3000 m, multiply the above derating curve by 0.8 to reduce the load. (Does not apply for face-up mounting)

S8V-NFS206

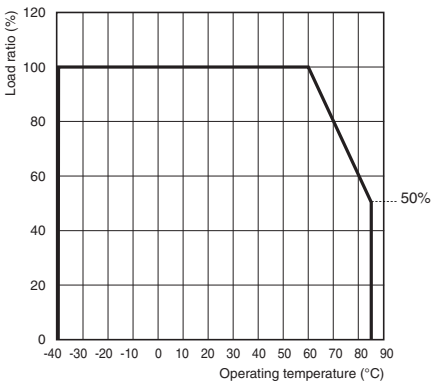

Note: If using at an altitude of 2000 m to 3000 m, multiply the above derating curve by 0.8 to reduce the load. (Does not apply for face-up mounting)

Attenuation Frequency Characteristics (Typical example)

S8V-NFS203

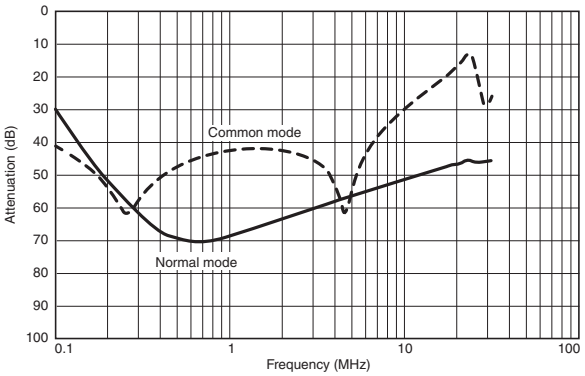

S8V-NFS206

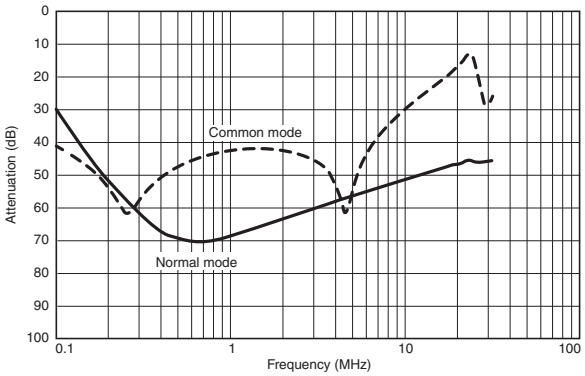

The above characteristics are data acquired by the following measurement circuits.

Common mode

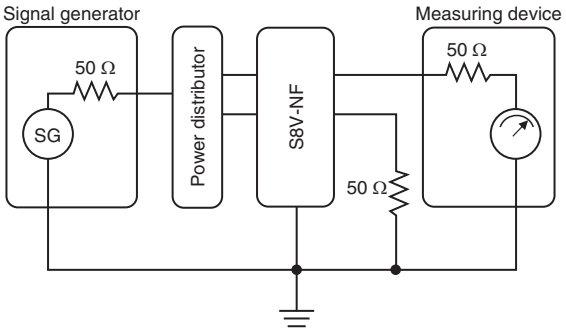

Normal mode

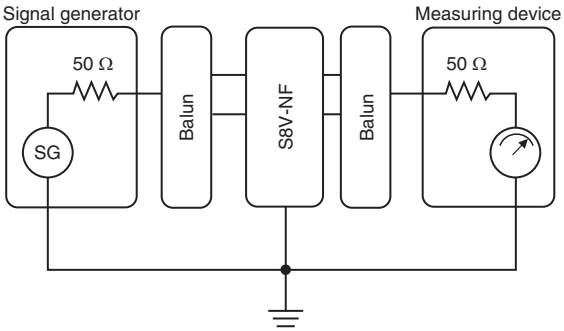

Note: The noise filter attenuation characteristics are measured under a constant I/O impedance of 50 Ω. When used attached to actual equipment, the power line impedance varies depending on the wiring method. Therefore, attenuation characteristics may not match those listed in the catalog.

Dimensions

(Unit: mm)

S8V-NFS203
S8V-NFS206

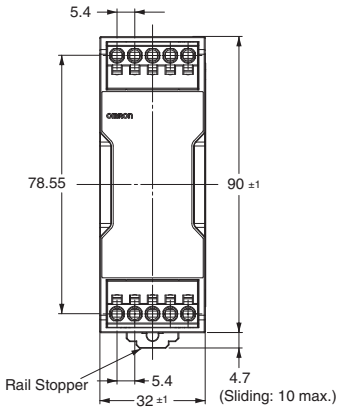

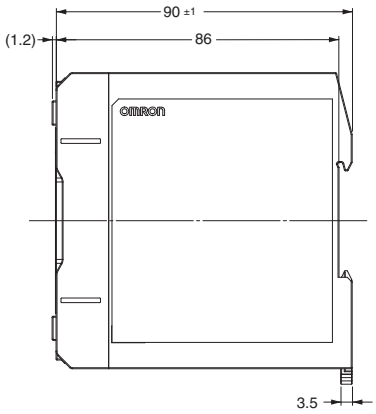

Mounting Brackets

Name	Model number
Front-mounting bracket	**S82Y-VS10F**
Side-mounting bracket	**S82Y-VS10S**

Name	Model number	Dimensions	Appearance
Front-mounting bracket	**S82Y-VS10F**	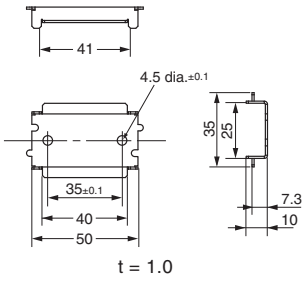	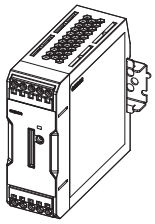
Side-mounting bracket	**S82Y-VS10S**	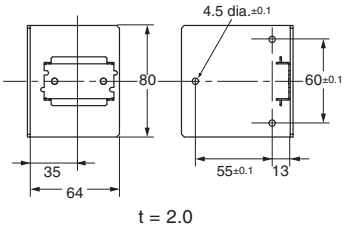	Left-side mounting Right-side mounting 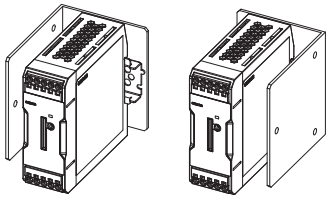

DIN Rails (Order Separately)

(Unit: mm)

Mounting Rail (Material: Aluminum)

PFP-100N
PFP-50N

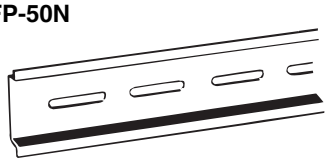

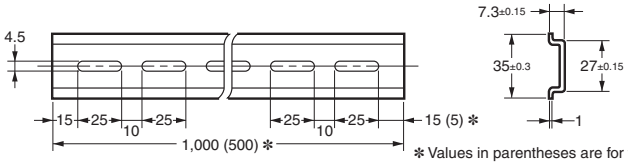

✻ Values in parentheses are for the PFP-50N.

Mounting Rail (Material: Aluminum)

PFP-100N2

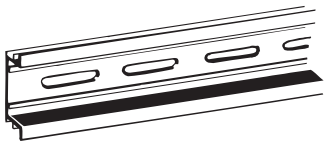

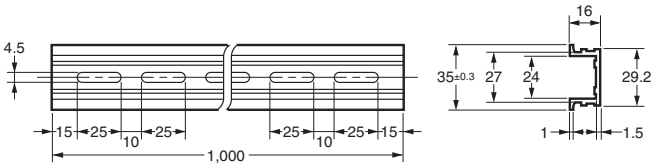

End Plate

PFP-M

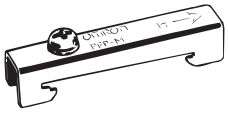

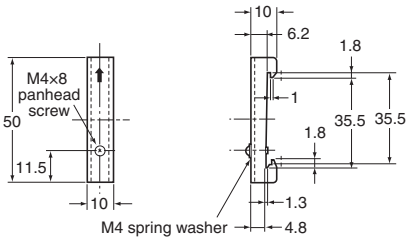

Note: If there is a possibility that the Unit will be subject to vibration or shock, use a steel DIN Rail. Otherwise, metallic filings may result from aluminum abrasion.

Safety Precautions

Warning Indications

WARNING	Indicates a potentially hazardous situation which, if not avoided, will result in minor or moderate injury, or may result in serious injury or death. Additionally, there may be significant property damage.
CAUTION	Indicates a potentially hazardous situation which, if not avoided, may result in minor or moderate injury or in property damage.
Precautions for Safe Use	Supplementary comments on what to do or avoid doing, to use the product safely.
Precautions for Correct Use	Supplementary comments on what to do or avoid doing, to prevent failure to operate, malfunction or undesirable effect on product performance.

Meaning of Product Safety Symbols

	Used to warn of the risk of electric shock under specific conditions.
	Used to warn of the risk of minor injury caused by high temperatures.
	Used to indicate prohibition when there is a risk of minor injury from electrical shock or other source if the product is disassembled.
	Used for general mandatory action precautions for which there is no specified symbol.

⚠ WARNING

The electrical wire may come out and an electric shock may be caused. Insert the solid wire or ferrule straight into the terminal block until the end touches the terminal block.

⚠ CAUTION

Minor electric shock, fire, or product failure may occasionally occur. Do not disassemble, modify, or repair the product or touch the interior of the product.

Minor burns may occasionally occur. Do not touch the product while power is being supplied or immediately after power is turned OFF.

Minor injury due to electric shock may occasionally occur. Do not touch the terminals while power is being supplied.

Minor electric shock, fire, or product failure may occasionally occur. Do not allow any pieces of metal, conductors, or cuttings from installation work to enter the product.

Fire or product failure may occasionally occur. Do not use on the secondary side (output side) of inverters, etc.

Precautions for Safe Use

Installation Environment

- Do not use the product in locations subject to shocks or vibrations. In particular, install the product as far away as possible from contactors or other devices that are a vibration source.
- Install the product well away from any sources of strong, high-frequency noise and surge.

Ambient Operating and Storage Environments

- Store the product at a temperature of -40 to 85°C and a humidity of 95% or less.
- Do not use the product in areas outside the derating curve otherwise, internal parts may occasionally deteriorate or be damaged.
- Use the product at a humidity of 95% max.
- Do not use the product in locations subject to direct sunlight.
- Do not use locations where liquids, foreign matter, or corrosive gases may enter the interior of the product.

Mounting

- Take adequate measures to ensure proper heat dissipation to increase the long-term reliability of the product. Be sure to allow convection in the atmosphere around devices when mounting. Do not use in locations where the ambient temperature exceeds the range of the derating curve.
- When cutting out holes for mounting, make sure that cuttings do not enter the interior of the product.

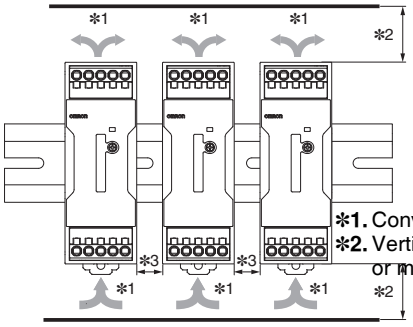

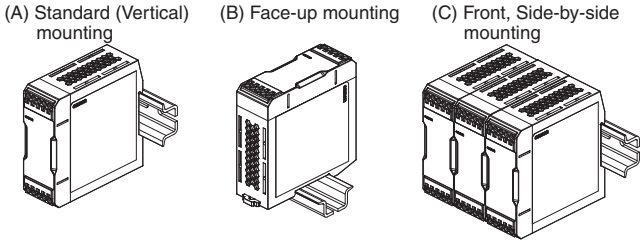

Note: Horizontal separation
(A), (B): 15 mm or more
(C) : 0 mm or more and 15 mm or less.

Wiring

- Connect the ground completely. A protective earthing terminal stipulated in safety standards is used. Electric shock or malfunction may occur if the ground is not connected completely.
- When you insert wires or insert a screwdriver into a release hole, do not press down on the terminal block with a force of 40 N or greater.
- Do not wire anything to the release holes.
- Do not tilt or twist a flat-blade screwdriver while it is inserted into a release hole on the terminal block. The terminal block may be damaged.
- Insert a flat-blade screwdriver into the release holes at an angle. The terminal block may be damaged if you insert the screwdriver straight in.
- Do not allow the flat-blade screwdriver to fall out while it is inserted into a release hole.
- Do not bend a wire past its natural bending radius or pull on it with excessive force. This may cause a wire to be broken.
- Do not insert more than one wire into each terminal insertion hole.
- Do not pre-solder the ends of the wires. Doing so will inhibit proper connection.
- Be sure to remove the sheet covering the product for machining before power-ON so that it does not interfere with heat dissipation.
- If there is a possibility of vibration or shock, please use wires and stranded wires with ferrules.
- To prevent wiring materials from ignition or smoking, confirm wire ratings and use the wiring materials given in the following table.

Terminal	Model number	Recommended wire gauge	
		(mm^2)	(AWG)
I/O terminals	S8V-NFS203	0.5 to 2.5	20 to 14
	S8V-NFS206	0.75 to 2.5	18 to 14
PE (protective earth) terminal	S8V-NFS203 S8V-NFS206	2 to 2.5	14

- Crossover wiring can be used for this product.
- However, do not allow the total steady-state current to terminals to exceed 10 A.
  The above table gives the recommended wires for one product.
- When using crossover wiring, select wiring materials suitable for the total current that will flow to terminals.

Stripping length

Recommended Wire	Stripping length (Ferrules not used)
0.34 to 1.5 mm^2/AWG20 to 16	8 mm
2 to 2.5 mm^2/AWG14	10 mm

Precautions for Correct Use

DIN Rail Mounting

To mount the Block on a DIN Rail, hook portion (A) of the Block onto the rail and press the Block in direction (B).

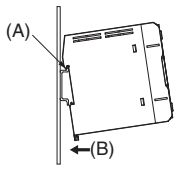

To dismount the Block, pull down portion (C) with a flat-blade screwdriver and pull out the Block.

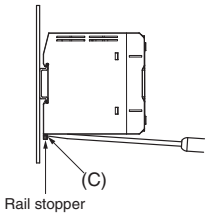

Connecting Wires to the Push-In Plus Terminal Block

Part Names of the Terminal Block

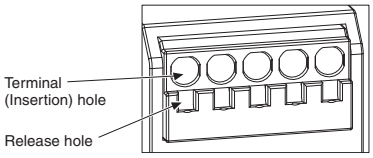

Connecting Wires with Ferrules and Solid Wires

Insert the solid wire or ferrule straight into the terminal block until the end touches the terminal block.

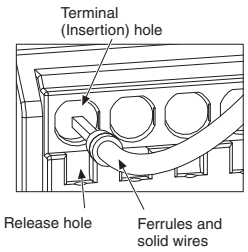

- If a wire is difficult to connect because it is too thin, use a flat-blade screwdriver in the same way as when connecting stranded wire.

Connecting Stranded Wires

Use the following procedure to connect the wires to the terminal block.

1. Hold a flat-blade screwdriver at an angle and insert it into the release hole.
   The angle should be between 10° and 15°. If the flat-blade screwdriver is inserted correctly, you will feel the spring in the release hole.
2. With the flat-blade screwdriver still inserted into the release hole, insert the wire into the terminal hole until it strikes the terminal block.
3. Remove the flat-blade screwdriver from the release hole.

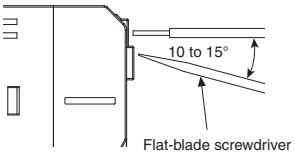

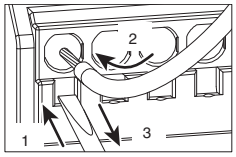

Checking Connections

- After the insertion, pull gently on the wire to make sure that it will not come off and the wire is securely fastened to the terminal block
- The insulation distance is still satisfied although some of the conductor may still be visible after being inserted into the terminal block, even though the recommended ferrule is used.

Removing Wires from the Push-In Plus Terminal Block

Use the following procedure to remove wires from the terminal block. The same method is used to remove stranded wires, solid wires, and ferrules.

1. Hold a flat-blade screwdriver at an angle and insert it into the release hole.
2. With the flat-blade screwdriver still inserted into the release hole, remove the wire from the terminal insertion hole.
3. Remove the flat-blade screwdriver from the release hole.

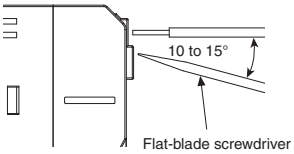

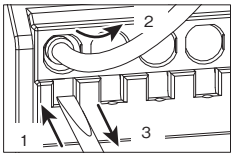

Recommended Ferrules and Crimping Tools

Recommended Ferrules

Applicable wire		Ferrule Conductor length (mm)	Stripping length (mm) (Ferrules used)	Recommended ferrules		
(mm^2)	(AWG)			Manufactured by Phoenix Contact	Manufactured by Weidmuller	Manufactured by Wago
0.50	20	8	10	AI 0,5-8	H0.5/14	FE-0.5-8N-WH
		10	12	AI 0,5-10	H0.5/16	FE-0.5-10N-WH
0.75	18	8	10	AI 0,75-8	H0.75/14	FE-0.75-8N-GY
		10	12	AI 0,75-10	H0.75/16	FE-0.75-10N-GY
1/1.25	18/17	8	10	AI 1-8	H1.0/14	FE-1.0-8N-RD
		10	12	AI 1-10	H1.0/16	FE-1.0-10N-RD
1.25/1.5	17/16	8	10	AI 1,5-8	H1.5/14	FE-1.5-8N-BK
		10	12	AI 1,5-10	H1.5/16	FE-1.5-10N-BK
2.5	14	10	12	AI 2,5-10	H2.5/16DS	FE-2.5-10N-BU
Recommended crimp tool				CRIMPFOX6 CRIMPFOX6T-F CRIMPFOX10S	PZ6 roto	Variocrimp4

Note: 1. Make sure that the outer diameter of the wire is smaller than the inner diameter of the insulating sleeve of the recommended ferrule.

2. Make sure that the ferrule processing dimensions conform to the following figure.

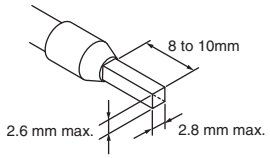

Recommended Flat-blade Screwdriver

Use a flat-blade screwdriver to connect and remove wires. Use the following flat-blade screwdriver.

The following table shows manufacturers and models as of 2018/Dec.

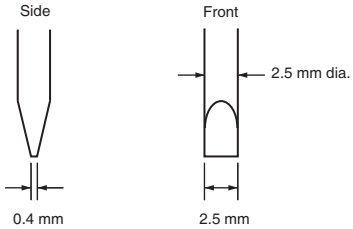

Model number	Manufacturer
ESD 0,40×2,5	Wera
SZS 0,4×2,5 SZF 0-0,4×2,5 ✻	Phoenix Contact
0.4×2.5×75 302	Wiha
AEF.2,5×75	Facom
210-719	Wago
SDIS 0.4×2.5×75	Weidmuller
9900(-2.5×75)	Vessel

✻ OMRON's exclusive purchase model XW4Z-00B is available to order as SZF 0-0,4×2,5 (manufactured by Phoenix Contact).

Period and Terms of Warranty

Warranty Period

The product warranty is valid for a period of five years from the date of shipment from the factory.

Terms of Warranty

The warranty is valid only for the following operating conditions.
1. Average ambient operating temperature of the product: 40°C max. (See note.)
2. Average load rate of 80% max. (See note.)
3. Mounting method: Standard mounting

Note: The maximum ratings must be within the derating curve.

If the product fails for reasons attributable to OMRON within the above warranty period, OMRON will repair or replace the faulty part of the product at the place of purchase or the place where the product delivered without charge.
This warranty does not cover the following types of failures.

(1) Failures that result from handling or operation of the product under conditions or in environments that are not given in this document and not given in any other specifications exchanged between OMRON and the customer
(2) Failures that originate in causes other than the delivered product itself
(3) Failures caused by disassembly, modification, or repair of the product by anyone other than OMRON
(4) Failures caused by applications or uses for which the product was not originally intended.
(5) Failures caused by factors that could not be anticipated with the scientific or technical knowledge available when the product was shipped.
(6) Failures caused by other causes for which OMRON is not responsible, such as natural disasters and other acts of God.
This warranty is limited to the individual product that was delivered and does not cover any secondary, subsequent, or related damages.

Terms and Conditions Agreement

Read and understand this catalog.

Please read and understand this catalog before purchasing the products. Please consult your OMRON representative if you have any questions or comments.

Warranties.

(a) Exclusive Warranty. Omron's exclusive warranty is that the Products will be free from defects in materials and workmanship for a period of twelve months from the date of sale by Omron (or such other period expressed in writing by Omron). Omron disclaims all other warranties, express or implied.

(b) Limitations. OMRON MAKES NO WARRANTY OR REPRESENTATION, EXPRESS OR IMPLIED, ABOUT NON-INFRINGEMENT, MERCHANTABILITY OR FITNESS FOR A PARTICULAR PURPOSE OF THE PRODUCTS. BUYER ACKNOWLEDGES THAT IT ALONE HAS DETERMINED THAT THE PRODUCTS WILL SUITABLY MEET THE REQUIREMENTS OF THEIR INTENDED USE.

Omron further disclaims all warranties and responsibility of any type for claims or expenses based on infringement by the Products or otherwise of any intellectual property right. (c) Buyer Remedy. Omron's sole obligation hereunder shall be, at Omron's election, to (i) replace (in the form originally shipped with Buyer responsible for labor charges for removal or replacement thereof) the non-complying Product, (ii) repair the non-complying Product, or (iii) repay or credit Buyer an amount equal to the purchase price of the non-complying Product; provided that in no event shall Omron be responsible for warranty, repair, indemnity or any other claims or expenses regarding the Products unless Omron's analysis confirms that the Products were properly handled, stored, installed and maintained and not subject to contamination, abuse, misuse or inappropriate modification. Return of any Products by Buyer must be approved in writing by Omron before shipment. Omron Companies shall not be liable for the suitability or unsuitability or the results from the use of Products in combination with any electrical or electronic components, circuits, system assemblies or any other materials or substances or environments. Any advice, recommendations or information given orally or in writing, are not to be construed as an amendment or addition to the above warranty.

See http://www.omron.com/global/ or contact your Omron representative for published information.

Limitation on Liability; Etc.

OMRON COMPANIES SHALL NOT BE LIABLE FOR SPECIAL, INDIRECT, INCIDENTAL, OR CONSEQUENTIAL DAMAGES, LOSS OF PROFITS OR PRODUCTION OR COMMERCIAL LOSS IN ANY WAY CONNECTED WITH THE PRODUCTS, WHETHER SUCH CLAIM IS BASED IN CONTRACT, WARRANTY, NEGLIGENCE OR STRICT LIABILITY.

Further, in no event shall liability of Omron Companies exceed the individual price of the Product on which liability is asserted.

Suitability of Use.

Omron Companies shall not be responsible for conformity with any standards, codes or regulations which apply to the combination of the Product in the Buyer's application or use of the Product. At Buyer's request, Omron will provide applicable third party certification documents identifying ratings and limitations of use which apply to the Product. This information by itself is not sufficient for a complete determination of the suitability of the Product in combination with the end product, machine, system, or other application or use. Buyer shall be solely responsible for determining appropriateness of the particular Product with respect to Buyer's application, product or system. Buyer shall take application responsibility in all cases.

NEVER USE THE PRODUCT FOR AN APPLICATION INVOLVING SERIOUS RISK TO LIFE OR PROPERTY OR IN LARGE QUANTITIES WITHOUT ENSURING THAT THE SYSTEM AS A WHOLE HAS BEEN DESIGNED TO ADDRESS THE RISKS, AND THAT THE OMRON PRODUCT(S) IS PROPERLY RATED AND INSTALLED FOR THE INTENDED USE WITHIN THE OVERALL EQUIPMENT OR SYSTEM.

Programmable Products.

Omron Companies shall not be responsible for the user's programming of a programmable Product, or any consequence thereof.

Performance Data.

Data presented in Omron Company websites, catalogs and other materials is provided as a guide for the user in determining suitability and does not constitute a warranty. It may represent the result of Omron's test conditions, and the user must correlate it to actual application requirements. Actual performance is subject to the Omron's Warranty and Limitations of Liability.

Change in Specifications.

Product specifications and accessories may be changed at any time based on improvements and other reasons. It is our practice to change part numbers when published ratings or features are changed, or when significant construction changes are made. However, some specifications of the Product may be changed without any notice. When in doubt, special part numbers may be assigned to fix or establish key specifications for your application. Please consult with your Omron's representative at any time to confirm actual specifications of purchased Product.

Errors and Omissions.

Information presented by Omron Companies has been checked and is believed to be accurate; however, no responsibility is assumed for clerical, typographical or proofreading errors or omissions.

OMRON Corporation **Industrial Automation Company**
Kyoto, JAPAN
Contact: www.ia.omron.com

Regional Headquarters
OMRON EUROPE B.V.
Wegalaan 67-69, 2132 JD Hoofddorp
The Netherlands
Tel: (31)2356-81-300/Fax: (31)2356-81-388

OMRON ELECTRONICS LLC
2895 Greenspoint Parkway, Suite 200
Hoffman Estates, IL 60169 U.S.A.
Tel: (1) 847-843-7900/Fax: (1) 847-843-7787

OMRON ASIA PACIFIC PTE. LTD.
No. 438A Alexandra Road # 05-05/08 (Lobby 2),
Alexandra Technopark,
Singapore 119967
Tel: (65) 6835-3011/Fax: (65) 6835-2711

OMRON (CHINA) CO., LTD.
Room 2211, Bank of China Tower,
200 Yin Cheng Zhong Road,
PuDong New Area, Shanghai, 200120, China
Tel: (86) 21-5037-2222/Fax: (86) 21-5037-2200

Authorized Distributor:

© OMRON Corporation 2016-2017 All Rights Reserved.
In the interest of product improvement,
specifications are subject to change without notice.

CSM_1_9_0319
Cat. No. T205-E1-04 1217 (0416)